10" TABLE SAW
INSTRUCTION MANUAL

MODELS G1022SM, G1022Z, G1022ZF, G1022ZFX, G1022PROZ, & G1022PROZX

COPYRIGHT © NOVEMBER, 2002 BY GRIZZLY INDUSTRIAL, INC.
WARNING: NO PORTION OF THIS MANUAL MAY BE REPRODUCED IN ANY SHAPE OR FORM WITHOUT THE WRITTEN APPROVAL OF GRIZZLY INDUSTRIAL, INC.
PRINTED IN TAIWAN.

ONLINE MANUAL DISCLAIMER

THE INFORMATION IN THIS MANUAL REPRESENTS THE CONFIGURATION OF THE MACHINE AS IT IS CURRENTLY BEING SHIPPED. THE MACHINE CONFIGURATION CAN CHANGE AS PRODUCT IMPROVEMENTS ARE INCORPORATED. IF YOU OWN AN EARLIER VERSION OF THE MACHINE, THIS MANUAL MAY NOT EXACTLY DEPICT YOUR MACHINE . CONTACT CUSTOMER SERVICE IF YOU HAVE ANY QUESTIONS ABOUT DIFFERENCES. PREVIOUS VERSIONS ARE NOT AVAILABLE ONLINE.

WARNING

Some dust created by power sanding, sawing, grinding, drilling, and other construction activities contains chemicals known to the State of California to cause cancer, birth defects or other reproductive harm. Some examples of these chemicals are:

- Lead from lead-based paints.
- Crystalline silica from bricks, cement, and other masonry products.
- Arsenic and chromium from chemically treated lumber.

Your risk from these exposures varies, depending on how often you do this type of work. To reduce your exposure to these chemicals: work in a well ventilated area, and work with approved safety equipment, such as those dust masks that are specially designed to filter out microscopic particles.

Table Of Contents

PAGE

1. **SAFETY**
   - SAFETY RULES FOR ALL TOOLS....2-3
   - ADDITIONAL SAFETY INSTRUCTIONS FOR TABLE SAWS....4
   - AVOIDING KICKBACK....5
   - SAFETY ACCESSORIES....5-6
2. **INTRODUCTION**
   - COMMENTARY....7-8
3. **CIRCUIT REQUIREMENTS**
   - 110V OPERATION....9
   - 220V OPERATION....10
   - GROUNDING....11
   - EXTENSION CORD....11
4. **MACHINE FEATURES**
   - TERMS AND DEFINITIONS....12-13
5. **SET UP**
   - UNPACKING....14
   - PIECE INVENTORY....14-15
   - HARDWARE CONTENTS....16
   - HARDWARE RECOGNITION CHART....17
   - CLEAN UP....18
   - SITE CONSIDERATIONS....18
   - BEGINNING ASSEMBLY....19
   - STAND ASSEMBLY....19-21
   - HANDWHEELS....21
   - MOTOR....22-24
   - SWITCH....24
   - EXTENSION WINGS....25
   - FENCE RAILS....26
   - FENCE....26-29
   - BLADE....30
   - BLADE GUARD....31-32
   - TABLE INSERT....33
   - MITER GAUGE....34
   - START UP....35
   - RECOMMENDED ADJUSTMENTS....35
6. **OPERATIONS**
   - BLADE SELECTION....36-37
   - CROSSCUTTING....38
   - RIPPING....39
   - DADO CUTTING....40-42
   - RABBET CUTTING....42-45
7. **MAINTENANCE**
   - GENERAL....46
   - LUBRICATION....47
   - TABLE....47
   - V-BELT....47
   - MAINTENANCE LOG....48
8. **SERVICE ADJUSTMENTS**
   - BLADE PARALLELISM....49-51
   - 45˚ & 90˚ STOPS....52
9. **CLOSURE**
   - WIRING DIAGRAMS....54-55
   - PART DRAWINGS & LISTS....56-73
   - TROUBLESHOOTING....74
   - PUSHSTICK LAYOUT....75

SECTION 1: SAFETY

⚠WARNING

For Your Own Safety Read Instruction Manual Before Operating This Equipment

The purpose of safety symbols is to attract your attention to possible hazardous conditions. This manual uses a series of symbols and signal words which are intended to convey the level of importance of the safety messages. The progression of symbols is described below. Remember that safety messages by themselves do not eliminate danger and are not a substitute for proper accident prevention measures.

⚠DANGER	**Indicates an imminently hazardous situation which, if not avoided, WILL result in death or serious injury.**
⚠WARNING	**Indicates a potentially hazardous situation which, if not avoided, COULD result in death or serious injury.**
⚠CAUTION	**Indicates a potentially hazardous situation which, if not avoided, MAY result in minor or moderate injury, or MAY cause property damage.**
NOTICE	**This symbol is used to alert the user to useful information about proper operation of the equipment.**

⚠WARNING

Safety Instructions For Power Tools

1. **KEEP GUARDS IN PLACE** and in working order.
2. **REMOVE ADJUSTING KEYS AND WRENCHES.** Form habit of checking to see that keys and adjusting wrenches are removed from tool before turning on.
3. **KEEP WORK AREA CLEAN.** Cluttered areas and benches invite accidents.
4. **DO NOT USE IN DANGEROUS ENVIRONMENT.** Do not use power tools in damp or wet locations, or where any flammable or noxious fumes may exist. Keep work area well lighted.
5. **KEEP CHILDREN AND VISITORS AWAY.** All children and visitors should be kept at a safe distance from work area.
6. **MAKE WORKSHOP CHILD PROOF** with padlocks, master switches, or by removing starter keys.
7. **DO NOT FORCE TOOL.** It will do the job better and safer at the rate for which it was designed.
8. **USE RIGHT TOOL.** Do not force tool or attachment to do a job for which it was not designed.

⚠WARNING

Safety Instructions For Power Tools

9. **USE PROPER EXTENSION CORD**. Make sure your extension cord is in good condition. Conductor size must be in accordance with the chart below. The amperage rating is listed on the motor or tool nameplate. An undersized cord will cause a drop in line voltage resulting in loss of power and overheating. Your extension cord must also contain a ground wire and plug pin. Always repair or replace damaged extension cords.

Minimum Gauge for Extension Cords

	LENGTH		
AMP RATING	**25ft**	**50ft**	**100ft**
0-6	18	16	16
7-10	18	16	14
11-12	16	16	14
13-16	14	12	12
17-20	12	12	10
21-30	10	10	No

10. **WEAR PROPER APPAREL.** Do not wear loose clothing, gloves, neckties, rings, bracelets, or other jewelry which may get caught in moving parts. Non-slip footwear is recommended. Wear protective hair covering to contain long hair.

11. **ALWAYS USE ANSI-APPROVED SAFETY GLASSES.** Also use face or dust mask if cutting operation is dusty. Everyday eyeglasses only have impact resistant lenses, they are NOT safety glasses.

12. **SECURE WORK.** Use clamps or a vise to hold work when practical. It is safer than using your hand and frees both hands to operate tool.

13. **NEVER OVERREACH.** Keep proper footing and balance at all times.

14. **MAINTAIN TOOLS WITH CARE.** Keep tools sharp and clean for best and safest performance. Follow instructions for lubricating and changing accessories.

15. **DISCONNECT TOOLS** before servicing and changing accessories, such as blades, bits, cutters, and any other item.

16. **REDUCE THE RISK OF UNINTENTIONAL STARTING.** Make sure switch is in off position before plugging in. Also, the magnetic switch on this machine may start if the switch gets bumped hard enough.

17. **USE RECOMMENDED ACCESSORIES.** Consult the owner's manual for recommended accessories. The use of improper accessories may cause risk of injury.

18. **CHECK DAMAGED PARTS.** Before further use of the tool, a guard or other part that is damaged should be carefully checked to determine that it will operate properly and perform its intended function. Check for alignment of moving parts, binding of moving parts, breakage of parts, mounting, and any other conditions that may affect its operation. A guard or other part that is damaged must be properly repaired or replaced.

19. **NEVER LEAVE TOOL RUNNING UNATTENDED. TURN POWER OFF.** Do not leave tool until it comes to a complete stop.

20. **NEVER USE UNDER THE INFLUENCE** of alcohol or drugs, or when tired.

21. **IF AT ANY TIME YOU ARE EXPERIENCING DIFFICULTIES** performing the intended operation, stop using the machine! Then contact our service department or ask a qualified expert how the operation should be performed.

⚠WARNING

Additional Safety Instructions For Table Saws

1. **THRU-SAWING:** Use blade guard, splitter, and anti-kickback fingers on all thru-sawing operations. See **Page 12** for the definition of thru-sawing.

2. **KICKBACK:** Use anti-kickback devices during ALL cutting operations. If you do not have a complete understanding of how kickback occurs, or how to prevent it, Do not operate this table saw. See **Page 12** for the definition of kickback.

3. **DANGEROUS REACHING:** Do not reach behind or over the saw blade with either hand while the saw is running.

4. **PUSHSTICK:** Use a push stick when ripping narrow stock.

5. **FREE-HAND CUTTING:** The fence or the miter gauge must support the workpiece during all cutting operations.

6. **BODY POSITION WHEN CUTTING:** Do not stand or have any part of your body in-line with the path of the saw blade.

7. **WORKPIECE CONTROL:** Hold the workpiece firmly against the miter gauge or fence and hold the workpiece firmly against the table.

8. **CROSSCUTTING:** Move the rip fence out of the way when crosscutting.

9. **MITER GAUGE/RIP FENCE:** Never use the miter gauge and rip fence at the same time.

10. **STALLED BLADE:** Never attempt to free a stalled saw blade without first turning the saw off.

11. **CUTOFF TABLES:** Use adequate support to the rear and sides of the saw table for wide or long workpieces.

12. **HAND SAFETY:** Avoid awkward cutting operations and hand positions where a sudden slip could cause your hand to move into the saw blade.

13. **SAW BLADE:** Lower the saw blade below the table when not in use.

14. **DAMAGED SAW BLADE:** Never use a damaged saw blade or one that has been dropped.

15. **DADO CUTTING:** There is a high degree of risk involved with any dado operation. See **Page 12** for the definition of dado.

⚠WARNING

Unfamiliarity with this manual could result in serious personal injury. Become familiar with the contents of this manual, including all the safety warnings.

⚠WARNING

No list of safety guidelines can be complete. Operating this machinery may require additional safety precautions specific to your shop environment. Failure to use reasonable caution while operating this machine could result in serious personal injury.

Avoiding Kickback

⚠WARNING

Failure to understand how and why kickback occurs could cause serious personal injury. DO NOT operate this table saw if you do not have a clear understanding of kickback, and how it occurs.

Statistics prove that most common accidents among table saw users can be linked to kickback.

Kickback is typically defined as the high-speed expulsion of stock from the table saw toward its operator.

In addition to the danger of the operator or others in the area being struck by the flying stock, it is often the case that the operator's hands are forced into the blade during the kickback.

The following can help minimize kickbacks:

- Use your blade guard and splitter.
- Never for any reason place your hand behind the blade. Should kickback occur, your hand will be pulled into the blade.
- Inspect splitter for alignment between it and your blade.
- Never use the fence as a guide for crosscutting.
- Never attempt freehand cuts.
- Use a push stick or featherboard to maintain control of your workpiece.
- Feed cuts through to completion.
- Stand to the side when ripping.
- Ensure your fence and miter slot are parallel to the blade.

If you do not have a clear understanding of kickback and how it occurs, do not operate this table saw.

Safety Accessories

⚠WARNING

Not using safety accessories could cause serious personal injury. Learn how to correctly use each safety accessory.

Push Sticks

The use of push sticks, particularly when cutting small or narrow workpieces, provides a double benefit for saw operators. The push stick provides added leverage, enabling the operator to keep the workpiece firmly supported against the fence and table. At the same time, the push stick keeps the operator's hand safely away from the rotation of the saw blade as shown in **Figure 1**. See the template on **Page 76** of the manual for construction details, or purchase one from the Grizzly catalog or website.

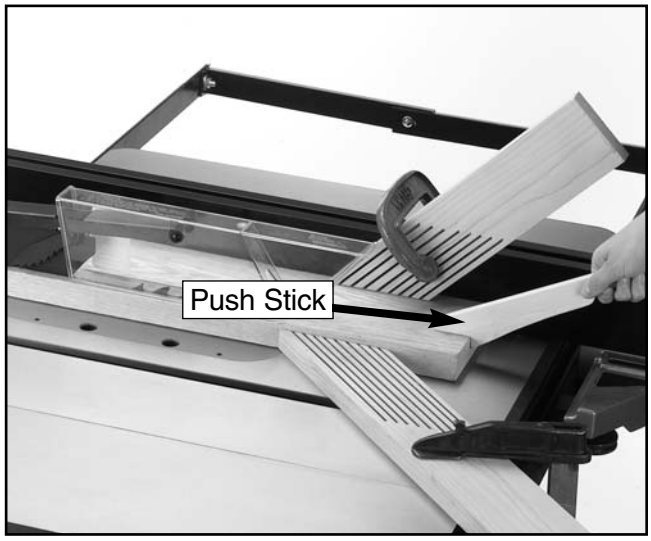

Figure 1. Push Stick.

Zero Clearance Table Inserts

Ideal for use when ripping thin strips or making bevel cuts, these prevent tearout and jammed blades by supporting material close to the blade.

Use the standard table insert as a template when creating additional inserts from wood or plywood. Slots can be custom cut for specific blade angles by raising the running blade into an uncut insert at the angle you desire. Be sure to make an additional slot for the blade splitter.

We also carry a wide selection of table inserts (**Figure 2**) in the Grizzly catalog or website. Be sure to hold the insert firmly in place with a piece of wood when creating slots. Never hold the table insert with your hand while cutting new slots.

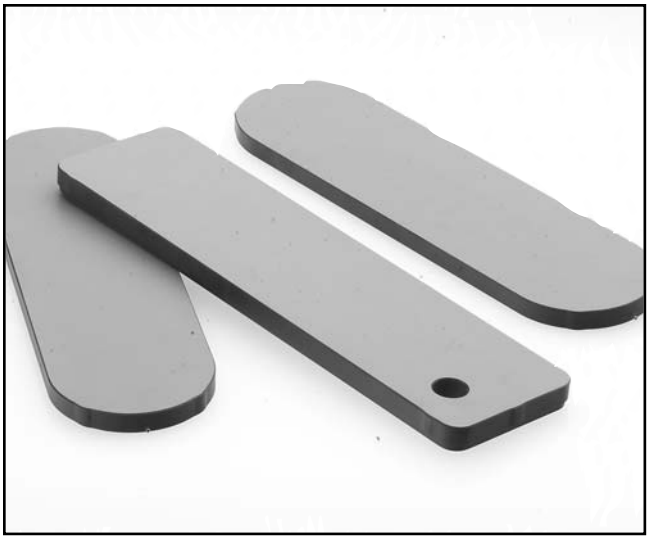

Figure 2. Zero Clearance Table Inserts.

Push Paddles

Push paddles provide added leverage and support when ripping or crosscutting wide workpieces as shown in **Figure 3**. We offer a number of push paddles in the Grizzly catalog.

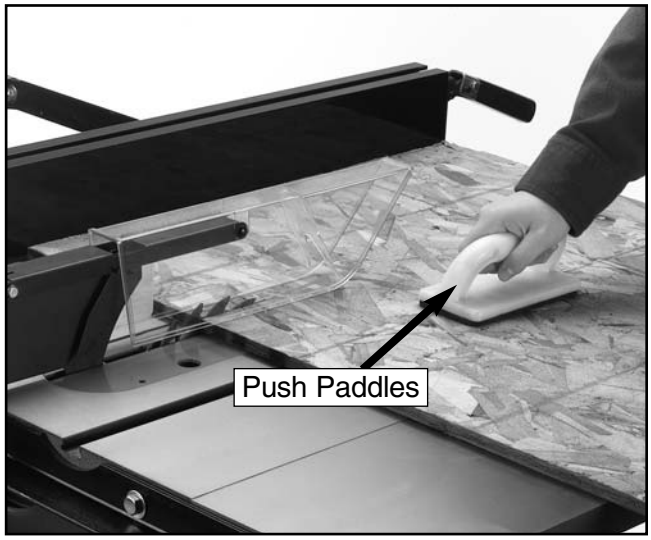

Figure 3. Push Paddles.

Featherboards

Easily made from scrap stock, featherboards provide an added degree of protection against kickback as shown in **Figure 4**. To make a featherboard, cut a 30-40° angle at one end of the board and make a number of end cuts at approximately ¼" apart and 2" to 3" deep. We also offer a number of featherboards in the Grizzly catalog.

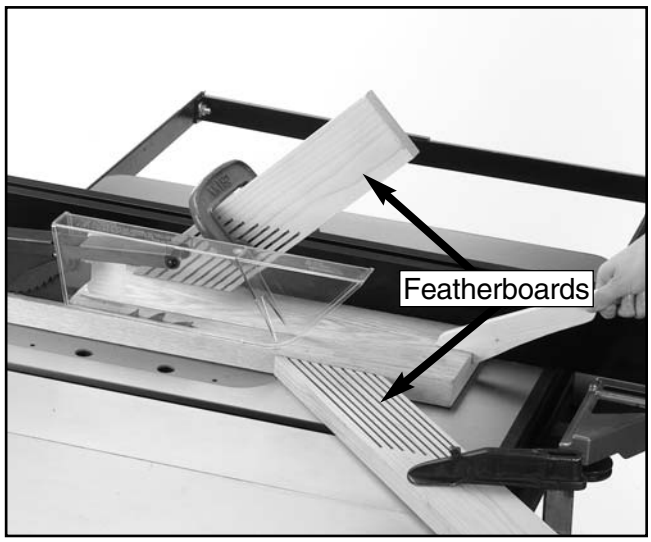

Figure 4. Featherboards.

SECTION 2: INTRODUCTION

G1022	Versions					
Features	**SM**	**Z**	**ZF**	**ZFX**	**PROZ**	**PROZX**
Extension Wings	Sheet Metal	Slotted Cast Iron	Slotted Cast Iron	Slotted Cast Iron	Solid Cast Iron	Solid Cast Iron
Rip Fence	Standard	T-Slot Fence	SHOP FOX® Heavy-Duty	SHOP FOX® Heavy-Duty	SHOP FOX® Classic	SHOP FOX® Heavy-Duty
Miter Gauge	Standard	Standard	Adjustable Slot	Adjustable Slot	Adjustable Slot	Adjustable Slot
Motor	1.5 HP-110/220V	1.5 HP-110/220V	1.5 HP-110/220V	2 HP-110/220V	2HP-110/220V	2HP-110/220V
Pre-Wired	110V	110V	110V	220V	220V	220V
Switch	Body Mounted	Body Mounted	Rail Mounted	Rail Mounted	Rail Mounted	Rail Mounted
Weight	220 lbs	250 lbs	290 lbs	290 lbs	340 lbs	340 lbs
Dust Port	-	-	4" Port	4" Port	4" Port	4" Port

Commentary

Grizzly is proud to offer the Model G1022 Series Table Saws. The Model G1022 Series Table Saws are part of a growing Grizzly family of fine woodworking machinery. When used according to the guidelines set forth in this manual, you can expect years of trouble-free, enjoyable operation and proof of Grizzly's commitment to customer satisfaction.

The Model G1022 Series Table Saws come in 6 different versions. The differences are listed on the chart above. They are all 10" heavy-duty table saws designed for a wide variety of cutting applications. They feature ball bearing arbors on a worm gear mechanism, precision-ground cast iron tables (except the Model SM), sturdy steel stands, standard and dado inserts, and a miter gauge.

Grizzly offers many accessories for the table saws including blades, extension rails, outfeed rollers and mobile bases. Please refer to the current Grizzly catalog or website for prices and ordering information.

Grizzly is also pleased to provide this manual with the Model G1022 Series Table Saws. It was written to guide you through assembly, review safety considerations, and cover general operating procedures. If you have any comments regarding this manual, please write to us at the address below:

Grizzly Industrial, Inc.
C/O Technical Documentation
P.O. Box 2069
Bellingham, WA 98227-2069

Most importantly, we stand behind our machines. If you have any service questions or parts requests, please call or write us at the location listed below:

Grizzly Industrial, Inc.
1203 Lycoming Mall Circle
Muncy, PA 17756
Phone: (570) 546-9663
Fax: (800) 438-5901
E-Mail: techsupport@grizzly.com
Web Site: http://www.grizzly.com

The specifications, drawings, and photographs illustrated in this manual represent the Model G1022 Series Table Saws as supplied when the manual was prepared. However, owing to Grizzly's policy of continuous improvement, changes may be made at any time with no obligation on the part of Grizzly. Current Grizzly machine manuals can be viewed and printed at: www.grizzly.com.

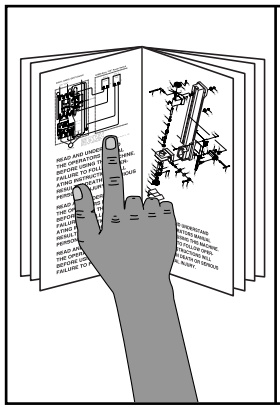

⚠WARNING

Lack of familiarity with this manual could cause serious personal injury. Become familiar with the contents of this manual, including all the safety warnings.

SECTION 3: CIRCUIT REQUIREMENTS

110V Operation

⚠WARNING

If the machine is not wired correctly a fire could result. Make sure your wiring, receptacle, plug, and circuit breaker can handle the current draw of the machine. If you are not sure that your electrical circuit can handle the current draw, get a qualified electrician to test your electrical system and do any required upgrades. Do not attempt to modify an existing circuit by only replacing the circuit breaker with one rated for a higher amperage draw than the wiring, receptacle, and plug are rated for.

The Models SM, Z & ZF motors are prewired to operate at 110V. See **Figure 5** for a typical 110V plug and outlet.

Models SM & Z:
Under normal 110V use, the Models SM & Z motors draw approximately 16 amps. Use a 20 amp circuit breaker or a 20 amp slow-blow fuse.

Model ZF:
Under normal 110V use, the Model ZF motor draws approximately 17 amps. Use a 20 amp circuit breaker or a 20 amp slow-blow fuse.

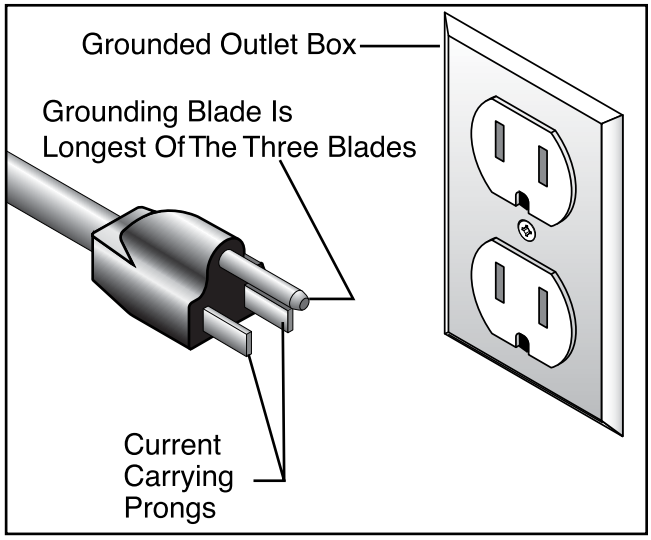

Figure 5. Typical 110V 3-prong plug and outlet.

The circuit you use should be dedicated, (i.e., the machine should provide the only draw from that circuit). If frequent circuit failures occur when using this machine, contact our Service Department or your local electrical contractor.

220V Operation

WARNING

If the machine is not wired correctly a fire could result. Make sure your wiring, receptacle, plug, and circuit breaker can handle the current draw of the machine. If you are not sure that your electrical circuit can handle the current draw, get a qualified electrician to test your electrical system and do any required upgrades. Do not attempt to modify an existing circuit by only replacing the circuit breaker with one rated for a higher amperage draw than the wiring, receptacle, and plug are rated for.

The motors supplied with the Models ZFX, PROZ, & PROZX are prewired to operate at 220V.

Models ZFX, PROZ, & PROZX:
Under normal 220V use, the motor draws approximately 13 amps. Use a 15 amp circuit breaker or a 15 amp slow-blow fuse for 220V operation.

The Models ZFX, PROZ, & PROZX do not come with a plug. When operating at 220V, use a NEMA-style 6-15 plug and receptacle as shown in **Figure 6**.

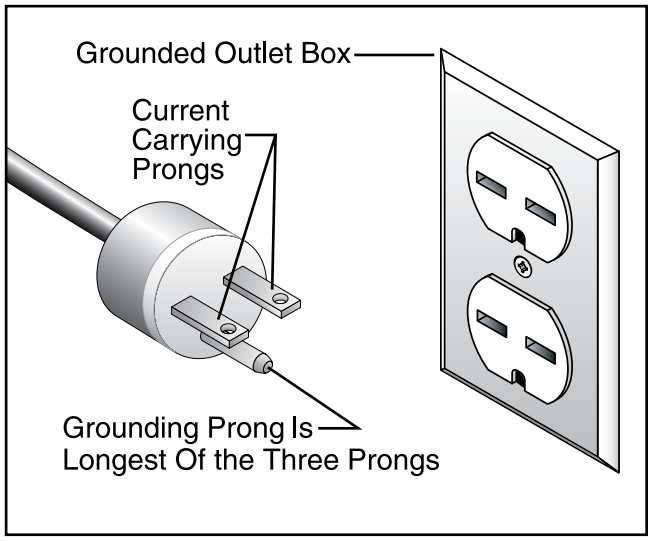

Figure 6. NEMA-style 6-15 plug and receptacle.

The circuit you use should be dedicated, (i.e., the machine should provide the only draw from that circuit). If frequent circuit failures occur when using this machine, contact our Service Department or your local electrical contractor.

Grounding

WARNING

Electrocution or a fire could result if the table saw is not grounded correctly. Make sure all electrical circuits are grounded. DO NOT use the machine if it is not grounded.

NOTICE

The wire on the power cord with green or green and yellow striped insulation is the grounding conductor.

In the event of an electrical short, grounding provides electric current a path of least resistance to reduce the risk of electrical shock to the operator. Ground the power cord and this machine in accordance with all local codes and ordinances.

Operating the machine when it is not properly grounded can result in electric shock or electrocution.

Extension Cord

Should it be necessary to use an extension make sure the cord is rated Hard Service (grade S) or better. Refer to the chart in *Section 1: Safety Instructions* to determine the minimum gauge for the extension cord. The extension cord must also contain a ground wire and plug pin. Always repair or replace extension cords when they become worn or damaged.

CAUTION

No single list of electrical guidelines can be comprehensive for all shop environments. Operating this machinery may require additional electrical upgrades specific to your machine and shop environment. It is your responsibility to make sure your electrical systems comply with all local electrical codes and ordinances.

SECTION 4: MACHINE FEATURES

Terms and Definitions

The following is a list of common definitions, terms and phrases used throughout this manual as they relate to this table saw and woodworking in general. It is important that you read and become familiar with them before assembling, adjusting or operating this machine. Your safety is **VERY** important to us at Grizzly!

Arbor: Metal shaft extending from the drive mechanism, to which the cutting blade is attached.

Bevel Edge Cut: Tilting the saw arbor and blade to an angle between 0° and 45° to perform an angled cutting operation.

Blade Guard: Metal or plastic mechanism that mounts over the saw blade to prevent accidental contact with the cutting edge.

Crosscut: Table saw operation in which the miter gauge is used to cut across the grain of a piece of wood.

Dado Blade: Blade or set of blades that attach to the arbor and are used for cutting grooves and rabbets.

Dado Cut: Table saw operation that uses a dado blade to cut a flat bottomed groove into the face of wood stock.

Featherboard: Safety device used to keep the workpiece against the rip fence or table during a cutting operation. The featherboard also allows the operator to keep his/her hands at a safe distance away from the saw blade while cutting the workpiece.

Kerf: The resulting cut or gap made by a saw blade.

Kickback: A condition in which the wood is thrown back towards an operator at a high rate of speed.

Miter Gauge: A component that controls the wood stock movement while performing a crosscut. Allows for variation of angle cuts such as miter cuts used on a picture frame.

Moulding Head: A cutterhead attached to the arbor that accepts interchangeable moulding knives for profile cutting. We **DO NOT** recommend the use of moulding head cutters.

Parallel: Being an equal distance apart at every point. i.e. the rip fence face is parallel to the side face of the saw blade.

Non-Thru Cut: A sawing operation that requires the removal of the blade guard and splitter. Dado and rabbet cuts are considered Non-Thru Cuts because the blade does not protrude above the top face of the wood stock. Always remember to reinstall the blade guard and splitter after performing a non-thru cut.

Perpendicular: Intersecting and forming right angles; at right angles to the vertical and horizontal planes. i.e. the blade is perpendicular to the table surface.

Push Paddle: Safety aid used to push a piece of wood stock through a cutting operation.

Push Stick: Safety aid used to push a piece of wood stock through a cutting operation. Usually used when rip cutting.

Rabbet: Cutting operation that creates an L-

shaped channel along the edge of wood stock.

Splitter: Metal plate attached to the back of the blade guard that maintains the kerf opening in the wood when performing a cutting operation.

Standard Kerf: 1/8" gap made with a standard blade.

Straightedge: A tool used to check the flatness, parallelness, or consistency of a surface(s).

Thru-Sawing: A sawing operation where the wood stock thickness is completely sawn through. Proper blade height usually allows 1/4" of the top of the blade to extend above the wood stock.

Thin Kerf: 3/32" gap made with a thin kerf blade.

Rip Cut: A cut made along the grain of the wood.

Sacrificial Fence: A piece of wood attached to the face of the rip fence that is designed to extend the fence face away from the metal portion of the fence. Used primarily when making rabbet cuts with a dado blade.

Main Features

Set up and operation instructions will be easier to understand if you become familiar with the location and names of the basic features.

Match up the feature list below with the letters in **Figure 7** to identify the table saw feature locations.

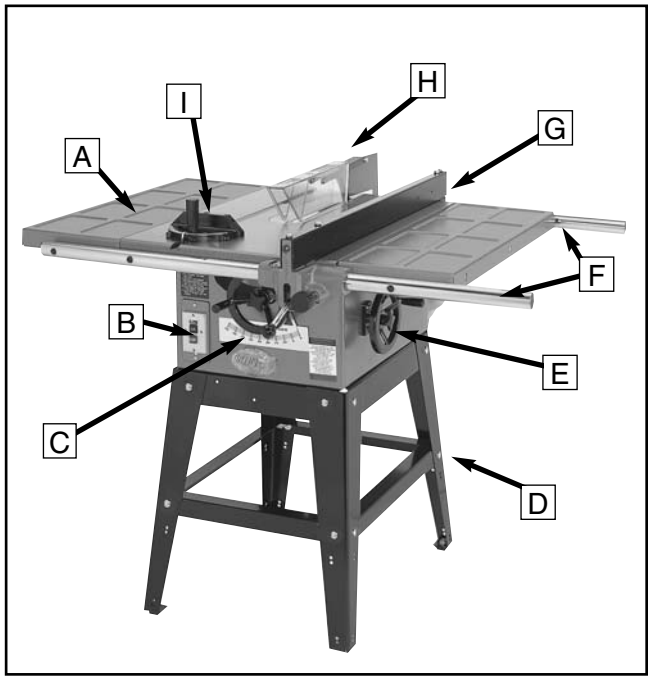

Figure 7. The front of the table saw. (Model SM Shown)

A. Extension Wing

B. On/Off Switch

C. Blade Angle Handwheel

D. Stand

E. Blade Height Handwheel

F. Rip Fence Rails

G. Rip Fence

H. Blade Guard/Splitter Assembly

I. Miter Gauge

SECTION 5: SET UP

Unpacking

The Model G1022 Series Table Saws are shipped from the manufacturer in carefully packed cartons. If you discover the machine is damaged after you have signed for delivery, immediately call our Customer Service for advice.

WARNING

The Model G1022 Series is a heavy machine, weighing up to 340 lbs. Personal injury could occur if the machine is moved without additional assistance. Seek the assistance of other people when moving or lifting the machine.

Piece Inventory

When you are completely satisfied with the condition of your shipment, you should inventory its parts.

CAUTION

Sharp edges on metal parts may cause personal injury. Examine the edges of all metal parts before handling.

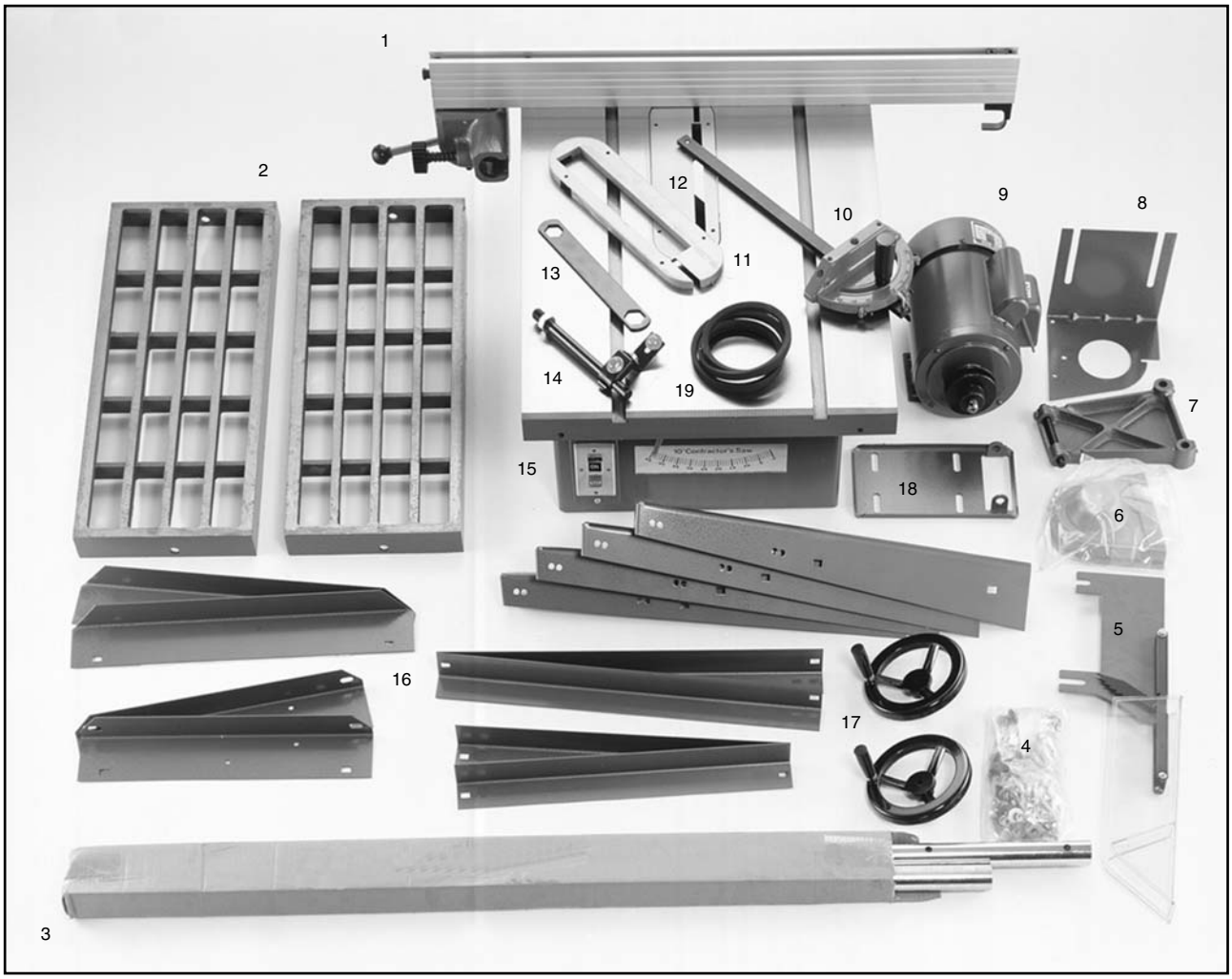

Figure 8. Rip fence, rails and extension wings will vary depending on the model.

After all the parts have been removed from the carton, you should have:

1. Fence Unit (Separate Box with Models ZF, ZFX, PROZ, & PROZX)
2. Extension Wings (2)
   - Model SM: Sheet Metal
   - Models Z, ZF, & ZFX: Slotted Cast Iron
   - Models PROZ & PROZX: Solid Cast Iron
3. Fence Rails (Separate Box)
4. Hardware Bags (5)
5. Blade Guard
6. V-Belt Guard and Mounting Hardware
7. Motor Bracket
8. V-Belt Guard Bracket
9. Motor with Pulley
10. Miter Gauge
11. Dado Insert
12. Standard Insert
13. Arbor Wrench
14. Blade Guard Bracket
15. Table Saw Unit
16. Stand Components
17. Handwheels (2)
18. Motor Mount Plate
19. V-Belt

Hardware Contents

Qty	Description
8	Special Rail Bolt (SM & Z)
8	Fence Rail Spacer (SM & Z)
4	Flat Washer M10 (SM & Z)
4	Hex Nut M10-1.5 (SM & Z)
4	Fence Rail Plug (SM & Z)
6	Flat Washer M10 x M4 Thick
6	Hex Bolt M10-1.5 x 25
2	Hand Wheel Knob

Guide Rail & Extension Wing Hardware Bag

Qty	Description
40	Carriage Bolt M8-1.25 x 16
4	Hex Bolt M8-1.25 x 19
48	Flat Washer M8
44	Hex Nut M8-1.25
4	Hex Bolt M10-1.5 x 20
4	Hex Nut M10-1.5
4	Flat Washer M10
4	Plastic Foot
4	Hex Bolt #10-24 x ⅜" (ZX, ZFX, PROZ, PROZX)
4	Hex Nut #10-24 (ZX, ZFX, PROZ, PROZX)
4	Lock Washer #10 (ZX, ZFX, PROZ, PROZX)

Floor Stand Hardware Bag

Qty	Description
1	Hex Bolt ¼"-20 x 2"
1	Flat Washer ¼"
1	Sleeve
1	Wing Nut ¼"-20
1	Plastic Belt Guard

Plastic Belt Guard Hardware Bag

Qty	Description
4	Hex Bolt M8-1.25 x 25
8	Flat Washer M8
4	Hex Nut M8-1.25

Motor Mount Hardware Bag

Hardware Recognition Chart

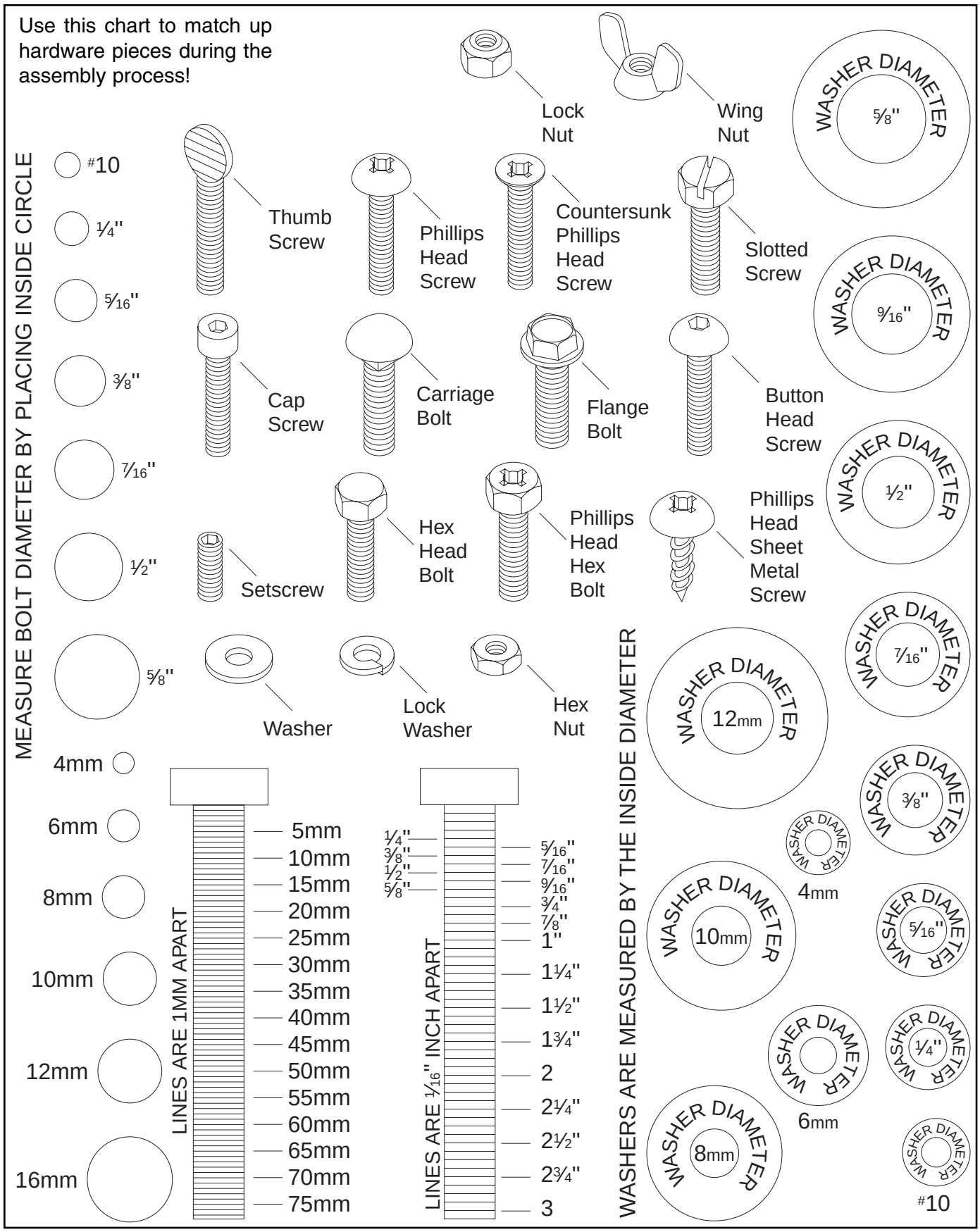

Clean Up

The unpainted surfaces are coated with a waxy oil to protect them from corrosion during shipment. Remove this waxy oil with a solvent cleaner or citrus-based degreaser such as Grizzly's G7895 Degreaser. To clean thoroughly, some parts may need to be removed. **The machine will operate best when the waxy oil is removed from all moving and sliding parts.** Chlorine-based cleaners and solvents will damage the painted surfaces of the machine. Follow the manufacturer's instructions when using any type of cleaning product.

⚠WARNING

Gasoline or petroleum products used to clean the machinery could explode causing serious personal injury. DO NOT use gasoline or petroleum products to clean the machinery.

⚠WARNING

Smoking near solvents could ignite an explosion or fire causing serious personal injury. Do not smoke while using solvents.

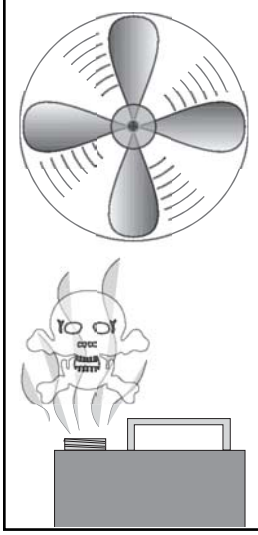

⚠WARNING

Lack of ventilation while using solvents could cause serious personal health risks, fire, or environmental hazards. Always work in a well ventilated areas to prevent the accumulation of dangerous fumes. Supply the work area with a constant supply of fresh air using a fan.

Site Considerations

Floor Load

The Model G1022 Series Table Saws are a heavy load with a medium footprint. Most commercial or home shop floors should be sufficient to carry the weight of the machine. Reinforce the floor if you question its ability to support the weight.

Working Clearance

Working clearances can be thought of as the distances between machines and obstacles that allow safe operation of every machine without limitation. Consider existing and anticipated machine needs, size of material to be processed through each machine, and space for auxiliary stands or work tables. Also, consider the relative position of each machine to one another for efficient material handling. Be sure to allow yourself sufficient room to safely run your machines in any foreseeable operation and keep dust collection hoses off the floor and out of the way.

Lighting

Lighting should be bright enough to eliminate shadows and prevent eye strain. Electrical circuits should be dedicated or large enough to handle combined motor amp loads. Be sure to follow local electrical codes for proper installation of new lighting or circuits.

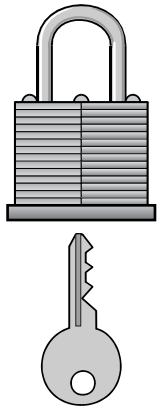

⚠WARNING

Unsupervised children and visitors entering a shop could receive serious personal injury. Ensure child and visitors safety by keeping all entrances to the shop locked at all times. DO NOT allow unsupervised children or visitors in the shop at any time.

Beginning Assembly

⚠WARNING

Loose hair and clothing could get caught in machinery causing serious personal injury. Keep loose clothing rolled up and long hair tied up and away from machinery.

⚠WARNING

Projectiles thrown from the machine could cause serious eye injury. Wear safety glasses during assembly.

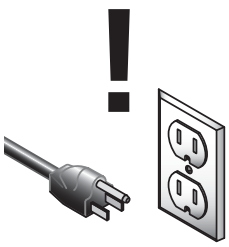

⚠WARNING

Disconnect the machine power cord during assembly. Failure to follow this warning could result in serious personal injury or death.

TOOLS REQUIRED: High quality square and straightedge, metric Allen wrench set, flat screwdriver, Phillips screwdriver, dead blow hammer and a 6" or 8" adjustable wrench.

Stand Assembly

⚠CAUTION

Examine the edges of all metal parts before handling. Sharp edges on metal parts may cause personal injury.

To assemble the stand:

1. Fasten the rubber feet to the leg bottoms using M10-1.5 x 25 hex bolts, 10MM flat washers and M10-1.5 hex nuts as shown in **Figure 9**.

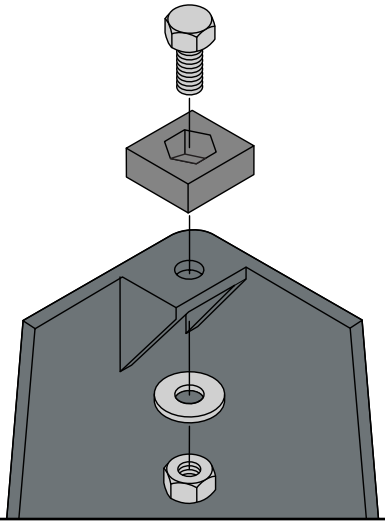

Figure 9. Installing the rubber feet.

2. Bolt the long upper and lower side braces (2 each) to the legs using M8-1.25 x 16 carriage bolts, 8MM flat washers and M8-1.25 hex nuts as shown in **Figure 10**. Do not completely tighten the hex bolts at this time.

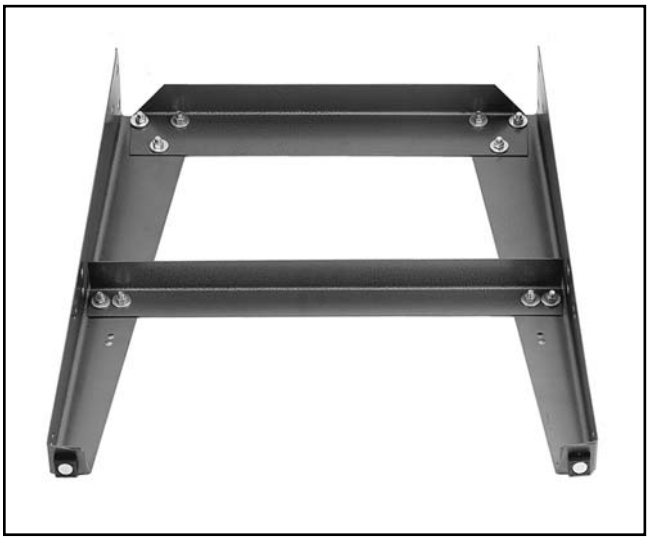

Figure 10. Long upper and lower braces attached to the stand legs.

3. Attach the short upper and lower side braces (2 each) to one of the assembled side panels using M8 - 1.25 x 16 carriage bolts, 8MM flat washers and M8-1.25 hex nuts as shown in **Figure 11**.

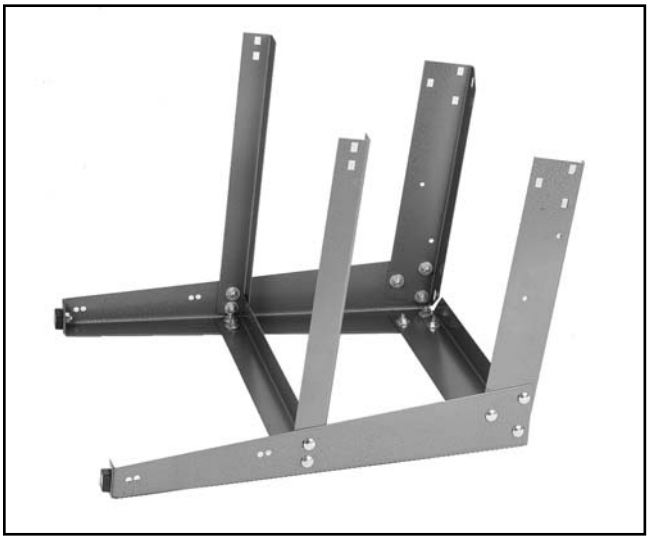

Figure 11. Short upper and lower braces attached to one of the stand assemblies.

4. Bolt the stand assemblies together using M8-1.25 x 16 carriage bolts, 8MM flat washers and M8-1.25 hex nuts as shown in **Figure 12**.

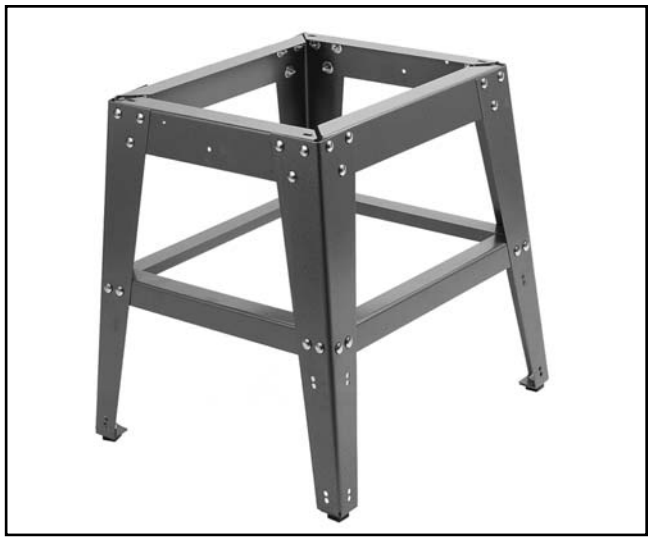

Figure 12. Stand completely assembled.

Models ZF, ZFX, PRO, & PROZX only:

5. Align the bolt holes on the dust hood with the bolt holes on the dust hood adapter.

6. Secure the dust hood and the dust adapter together using 10-24 x ⅜" bolts, 10-24 nuts and 3⁄16" lock washers.

7. Turn the table saw body upside-down.

8. Place the dust hood assembly over the bottom of the table saw body with the dust hood flange pointed up.

All Models:

8. Place the assembled stand upside down on the table saw body and align all the mounting holes. *Make certain the side of the stand with the "Z Series" label, if applicable, is on the front side of the machine (the side with the Grizzly label and angle scale).*

9. Secure the stand to the body using M8-1.25 x 19 hex bolts, 8MM flat washers and M8-1.25 hex nuts, with the dust port sandwiched between on the Models ZF, ZFX, PROZ, & PROZX, as shown in **Figure 13**.

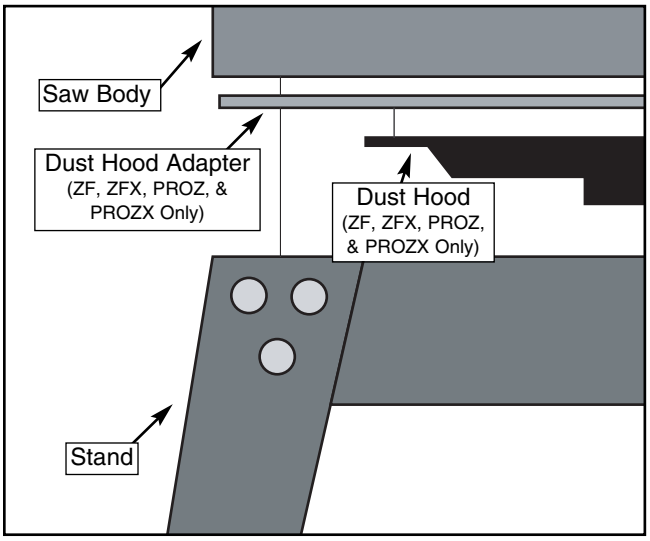

Figure 13. Attaching the stand to the saw base.

WARNING

The Model G1022 Series is a heavy machine, weighing up to 340 lbs. Personal injury could occur if the machine is moved without additional assistance. Seek the assistance of other people when moving or lifting the machine.

10. With the help of a second person, flip the entire table saw unit right side-up and move it into its working position.

11. Tighten all of the stand bolts.

Handwheels

To mount the handwheels:

1. Position one of the handwheels over the arbor lifting shaft on the front of the saw.

2. The slots in the handwheel hole will engage with the roll pin on the shaft as shown in **Figure 14**.

3. Position the other handwheel on the blade tilting shaft located on the side of the saw.

4. Screw the black plastic lock knobs onto the ends of the shafts to lock the handwheels in place.

Figure 14. Mounting the handwheels.

Motor

NOTICE

Motor pictures shown are specific to the Models SM & Z. The Models ZF, ZFX, PROZ, & PROZX will look different but will assemble in the same way.

To mount the motor:

1. Turn the motor upside down and attach the motor plate using M8-1.25 x 25 hex bolts, 8MM flat washers and M8-1.25 hex nuts as shown in **Figure 15**. Finger-tighten only.

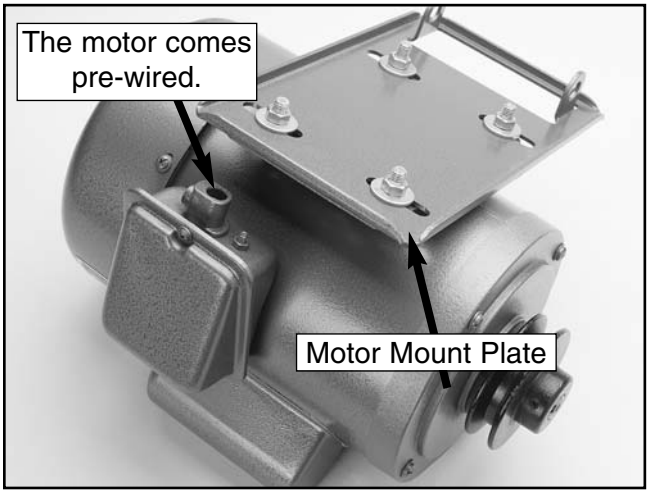

Figure 15. Attaching the motor plate.

2. Insert the ¼"-20 x 2" hex bolt through the hole in the pulley guard bracket as shown in **Figure 16**.

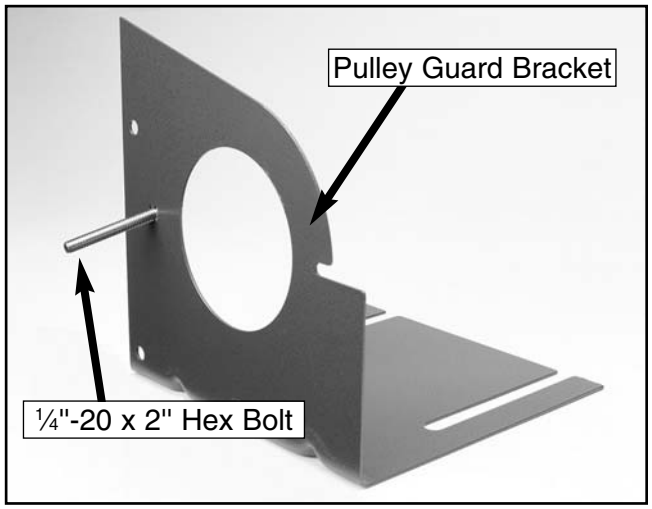

Figure 16. Pulley guard bracket.

3. Set the motor on end and slip the pulley guard bracket between the base of the motor and the motor plate as shown in **Figure 17**.

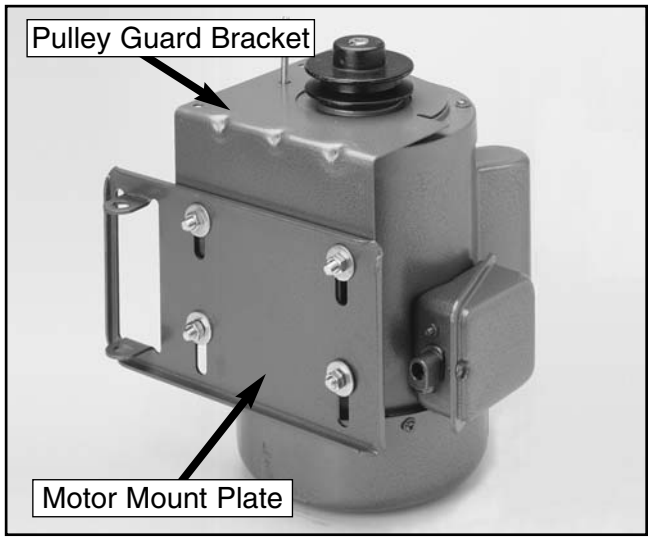

Figure 17. Installing pulley guard.

4. Tighten 1 of the 4 mounting bolts. Leave the other 3 loose.

5. Locate the motor mount bracket shown in **Figure 18**. Loosen the setscrew that holds the motor pivot rod in place and remove the rod.

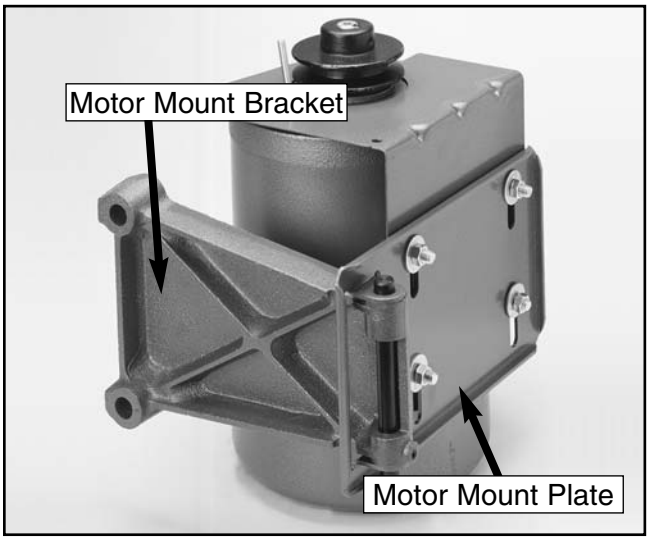

Figure 18. Installing the motor mount bracket.

6. Line up the hole in the motor bracket with the hole in the motor mount plate and insert the motor pivot rod. *Make sure the groove in the rod lines up with the setscrew in the mount bracket.*

7. Tighten the setscrew.

8. Turn the arbor tilting handwheel until the arbor is set to 0°.

9. Slide the motor assembly onto the linking bars through the holes in the motor bracket as shown in **Figure 19**.

10. Line up the setscrews with the grooves on the linking bars and tighten them.

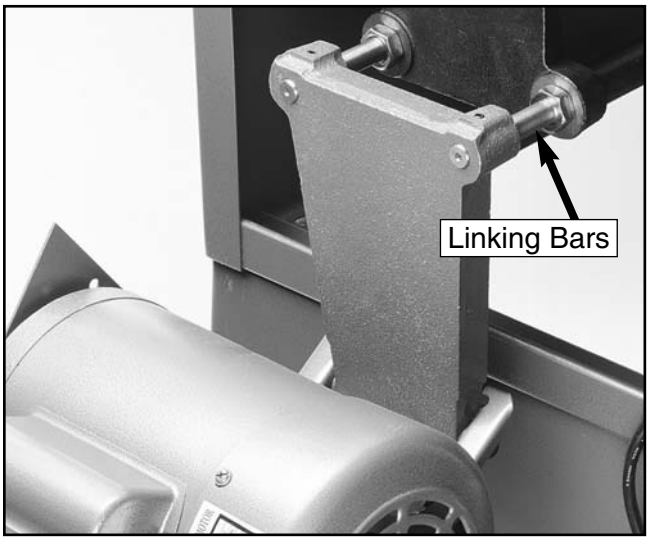

Figure 19. Attaching motor to linking bars.

11. Lift the motor up and slip the V-belt over the grooves in the pulleys. Slowly release the motor, allowing its weight to add tension to the V-Belt as shown in **Figure 20**.

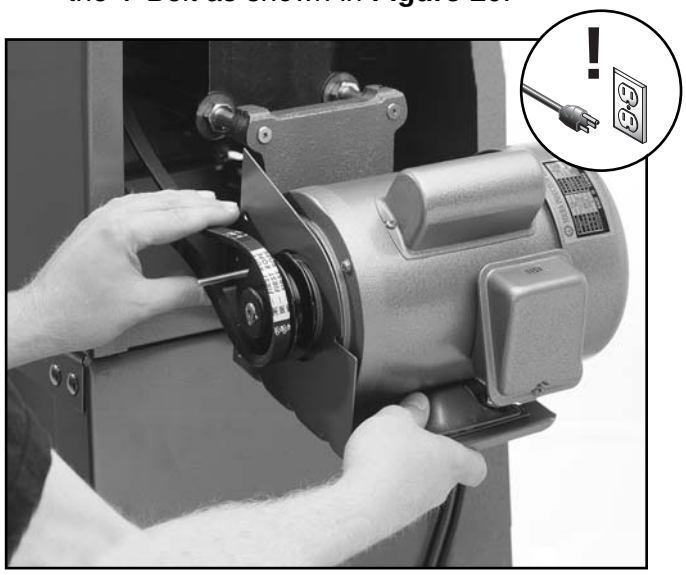

Figure 20. Attaching the V-belt to the motor.

12. Place a straightedge across the arbor pulley and the motor pulley. The straightedge should run across both pulleys evenly as shown in **Figure 21**.

13. If the motor needs to be adjusted, loosen the mounting bolt tightened in **Step 4**.

14. Adjust the motor on its mount until the pulleys are aligned, then tighten all the mounting bolts.

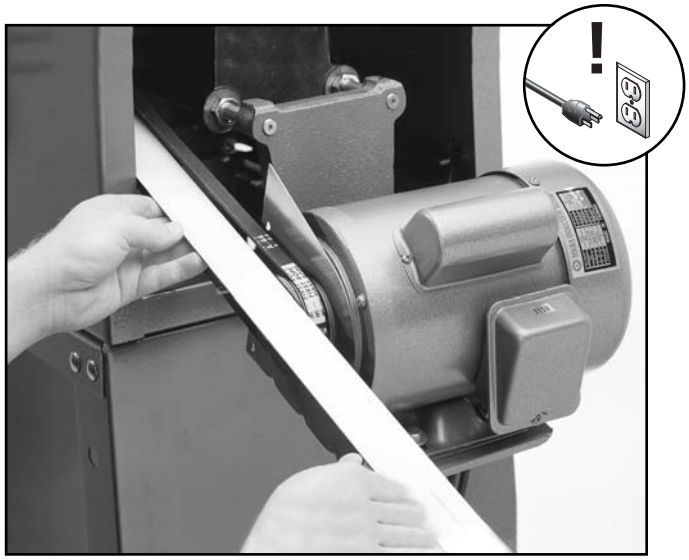

Figure 21. Checking V-belt alignment.

15. Using the supplied wing nut and mounting bolt, secure the pulley cover over the pulley and V-belt as shown in **Figure 22**.

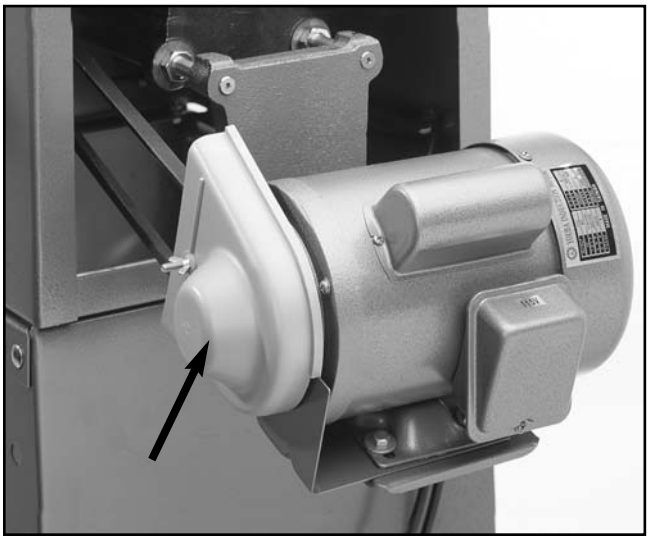

Figure 22. Attached pulley cover.

Switch

Models SM & Z:
The ON/OFF switch, with attached power cord and plug, is already mounted to the saw enclosure. Connect the quick disconnect on the cord between the switch and motor.

Models ZF, ZFX, PROZ, & PROZX:
The ON/OFF switch on the Models ZF, ZFX, PROZ, & PROZX mounts directly below the front fence rail.

To install the switch:

1. **Disconnect the machine from the power source!!**

2. Position the L-shaped mounting bracket below the left-hand side of the front fence rail. The shorter side of the L has two holes which will align with two holes in the fence rail.

3. Secure the bracket to the rail using M8-1.25 x 9 hex bolts and M8 flat washers (Model PROZ: M8-1.25 x 15 countersunk phillips head screws, M8-1.25 hex nuts, and M8 flat washers).

4. Secure the switch to the bracket using M4-0.7 x 14 phillips head screws and M4 flat washers. The screws thread through the back of the bracket and into threaded inserts in the back side of the switch box.

5. Connect the plug on the cord between the switch and motor.

Extension Wings

NOTICE

The Model SM has sheet metal wings; the Models Z, ZF, and ZFX uses slotted cast iron wings; and the Models PROZ & PROZX use solid cast iron wings. Installation is identical with all styles.

To install the extension wings:

1. Attach the extension wings to the table using M10 - 1.5 x 25 hex bolts and M10 flat washers.

2. Thread the center bolt in first, then the front and back bolts. DO NOT completely tighten the bolts at this time.

3. Working front to back, align the front edge of the extension wing with the edge of the table, so they are flush, and tighten the front bolt.

4. Raise or lower the rear of the extension wing until the middle of the wing is flush with the table top and tighten the middle bolt as shown in **Figure 23**.

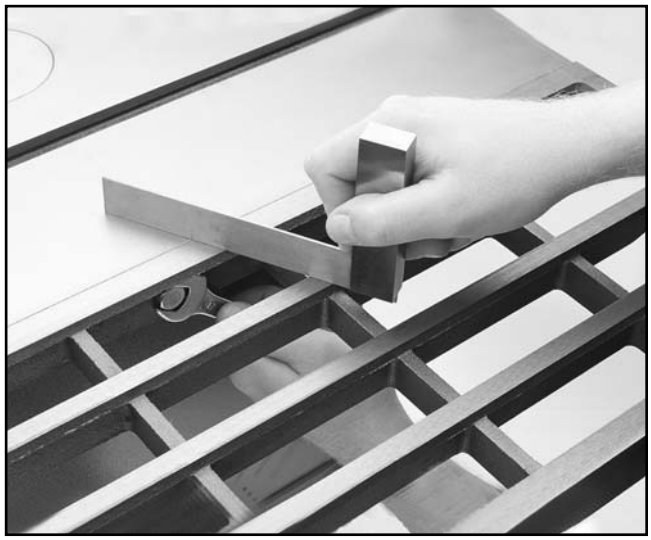

Figure 23. Checking table to wing alignment.

5. Raise or lower the rear of the wing until the wing and table are flush. Tighten the bolt.

6. Repeat **Steps 2-5** for the other extension wing.

7. Check the alignment of the table against both wings. Your straightedge should run flat across both wings and the table top. If the straightedge contacts both the wings and the table evenly, you may skip to the next section. If it does not, continue to **Step 8**.

8. If either wing tilts down, remove it and apply layers of masking tape along the entire edge of the wing under the bolt holes.

9. If the wing tilts up, apply layers of masking tape along the entire edge of the wing above the bolt holes.

10. Tighten bolts and adjust again as described in **Steps 2-5.**

11. Trim off the excess masking tape with a razor blade.

Fence Rails

NOTICE

The Models SM & Z are supplied with round rails, the Models ZF, ZFX, & PROZX are supplied with flat angular bar sections and the Model PROZ is supplied with square tube rails. This accommodates the standard fence for the Models SM & Z, the SHOP FOX® Heavy-Duty fence for the Models ZF, ZFX, & PROZX, and the SHOP FOX® Classic fence for the Model PROZ. Please refer to the SHOP FOX® manuals for complete information regarding the installation of the front and back fence rails on the Models ZX, ZXF, PROZ, & PROZX.

To mount the rails (Models SM & Z):

The two center bolts for each rail thread directly into the table top, and the outer two bolts secure from the back side of the extension wing with hex nuts.

Place a spacer on each bolt between the rail and the table/wing edge as shown in **Figure 24**. Be sure that the rail with the built-in measuring rule is mounted on the front side of the machine, with the markings facing up. Insert the round, plastic plugs into the ends of each rail.

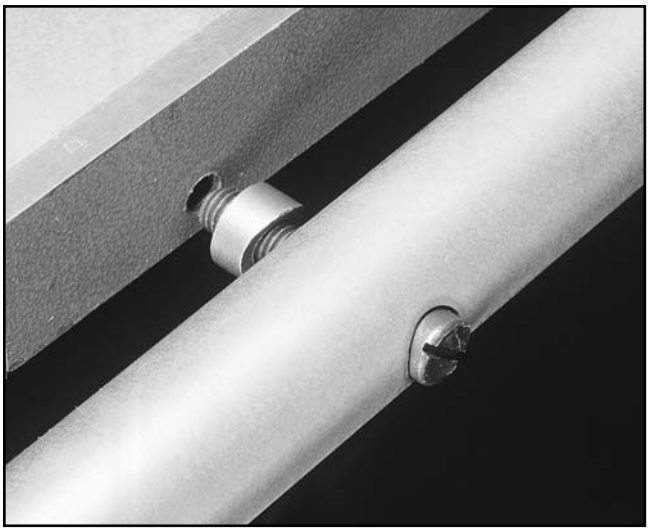

Figure 24. Attaching fence rails.

Fence

NOTICE

The Models ZX, ZXF, PROZ, & PROZX use a SHOP FOX® brand fence. Please refer to the manual included with the SHOP FOX® fence for adjusting instructions.

The fence must engage and square up on the front rail before the rear clamp engages the back rail. In essence, the rear clamp should act as a secondary mechanism for maintaining fence position. When adjusted correctly, the lever lock should only begin to apply pressure on the back rail over the last one-third of its stroke.

To install and adjust the Model SM fence:

1. Thread the plastic knob onto the lock handle.
2. Slide the fence onto the rails.
3. Make sure the front clamp engages the front rail with the lock handle at one-half of its throw.
4. If the front clamp requires adjustment, loosen the check nut shown in **Figure 25**. Turn the adjusting bolt clockwise if the front clamp is too far from the rail, or counter-clockwise if it is too close.

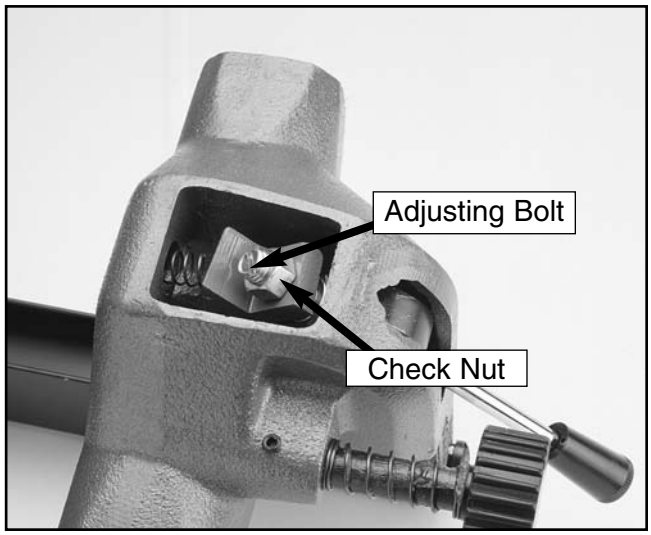

Figure 25. Adjusting clamp mechanism.

5. Slide the fence along the rail until it is aligned with the edge of the miter slot.

6. Lock the fence down.

7. Loosen the rear lock adjustment, the slotted screw on the front of the fence shown in **Figure 26**, until the rear locking clamp ceases to engage the rear rail with the fence in the locked position.

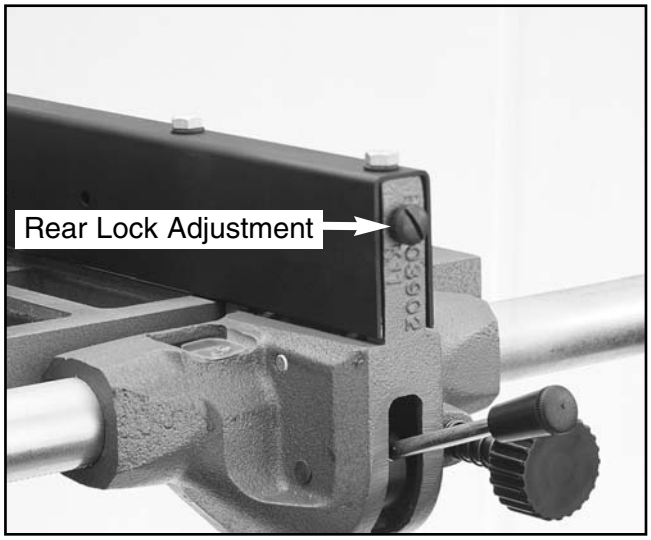

Figure 26. Rear lock adjustment screw.

6. Loosen the adjustment bolts at the top of the fence shown in **Figure 27**.

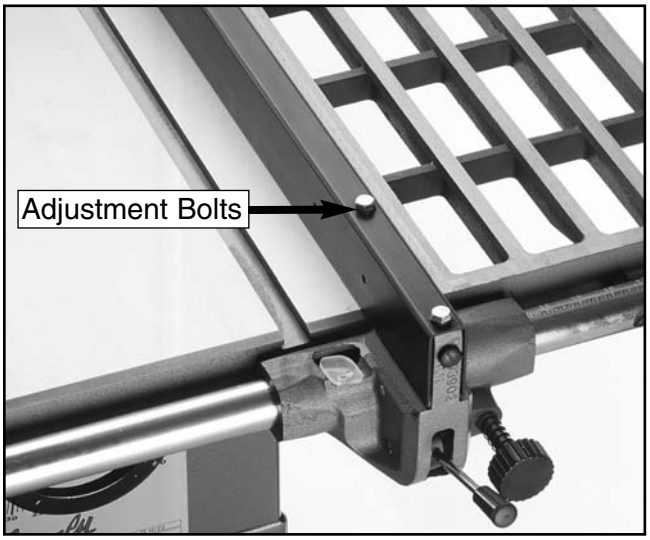

Figure 27. Adjustment bolts for fence parallelism.

8. Move the straight portion of the fence until it is parallel with the miter slot from front to back. Retighten the bolts.

9. Loosen the locking handle until it is approximately two-thirds engaged.

10. Tighten the rear adjusting screw until the rear clamp barely touches the back rail.

11. Loosen the locking handle and slide the fence along the rail. Return the fence to its position at the edge of the miter slot and slowly apply pressure to the lever.

    If adjustments are correct, the fence should square itself before the rear clamp engages. If the rear clamp engages before the fence is squared, loosen the screw one-quarter turn and retest.

12. Once the fence is adjusted, check the measurement pointer shown in **Figure 28** and adjust if necessary.

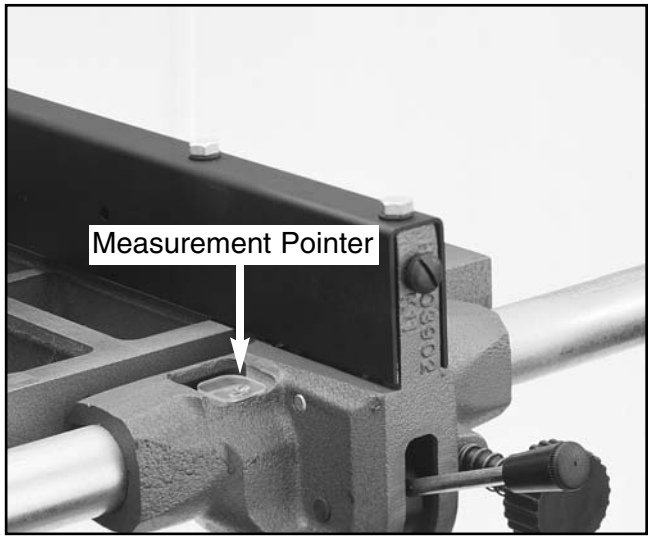

Figure 28. Adjust measurement pointer.

Tip: Attach a piece of ¾" thick hardwood to the blade side of the fence as shown in **Figure 29**. This will keep thin materials from wedging between the fence and table and will also protect the fence from coming in contact with the blade when dadoing or ripping thin stock. Remember to flip and adjust the measurement scale on the rail to compensate for the thickness of the sacrificial fence.

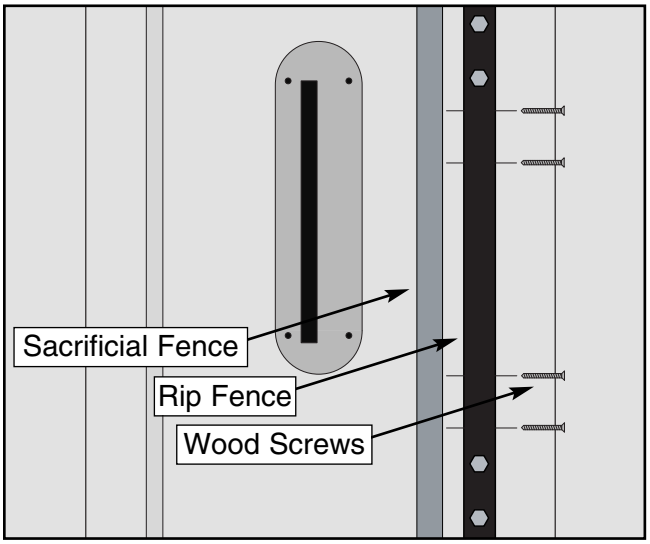

Figure 29. Attaching a sacrificial fence.

To install and adjust the Model Z fence:

1. First, make sure the front clamp is engaging the front rail with the lock handle at one-half of its throw.

2. If the front clamp requires adjustment, loosen the check nut shown in **Figure 30**. Turn the adjusting bolt clockwise if the front clamp is too far from the rail, counter-clockwise if it is too close.

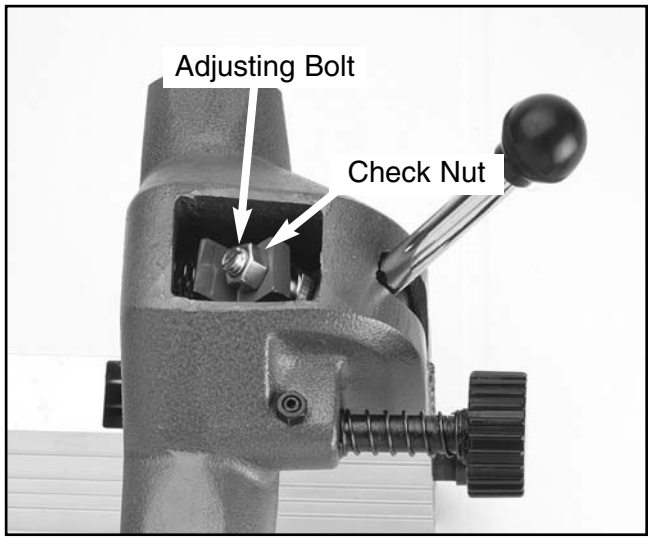

Figure 30. Adjusting clamp mechanism.

3. Slide the fence along the rail until it is aligned with the edge of the miter slot.

4. Lock the fence down.

5. Loosen the rear lock adjustment (the slotted screw on the front of the fence shown in **Figure 31**) until the rear locking clamp ceases to engage the rear rail with the fence in the locked position.

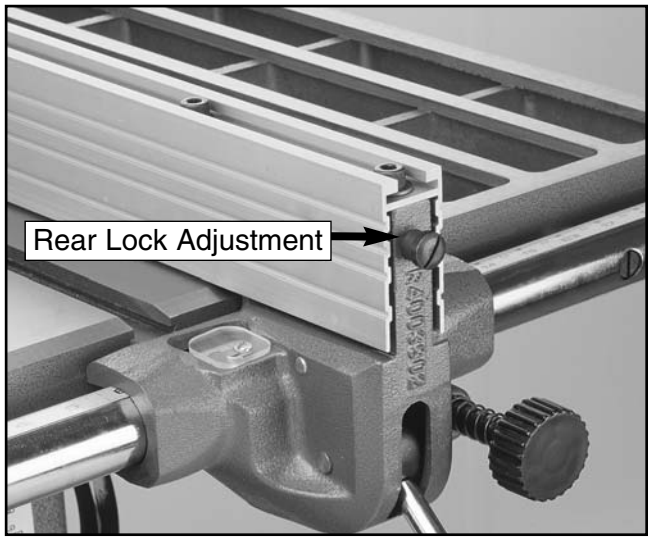

Figure 31. Rear lock adjustment screw.

6. Loosen the locking handle (**Figure 32**) until it is approximately two-thirds engaged.

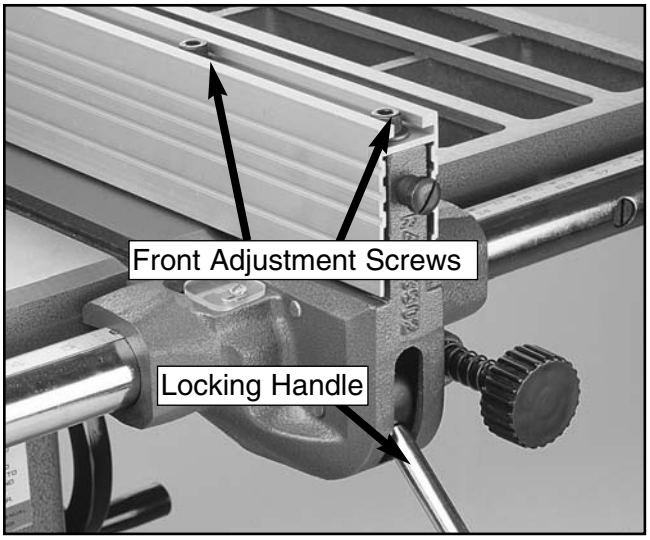

Figure 32. Adjustment bolts for fence parallelism.

7. Make note of its position and lift it up all the way. Tighten the rear adjustment screw until the rear clamp is approximately 1⁄16" from the rail.

8. Move the lock handle back to its two-thirds position. The rear clamp should just be touching the rail. If it is too loose or too tight, lift the handle and turn the adjusting screw in small increments until the clamp is in its proper location.

NOTICE

Do not turn the adjustment screw unless the lock handle is in the up position. Damage to the clamp shoe will result if this step is not observed.

9. Loosen the locking handle and slide the fence along the rail. Return the fence to its position at the edge of the miter slot and slowly apply pressure to the handle.

10. If adjustments are correct, the fence should square itself before the rear clamp engages. If the rear clamp engages before the fence is squared, loosen the screw one-quarter turn and retest.

11. Once the fence is adjusted, check the measurement pointer shown in **Figure 33**, and adjust if necessary.

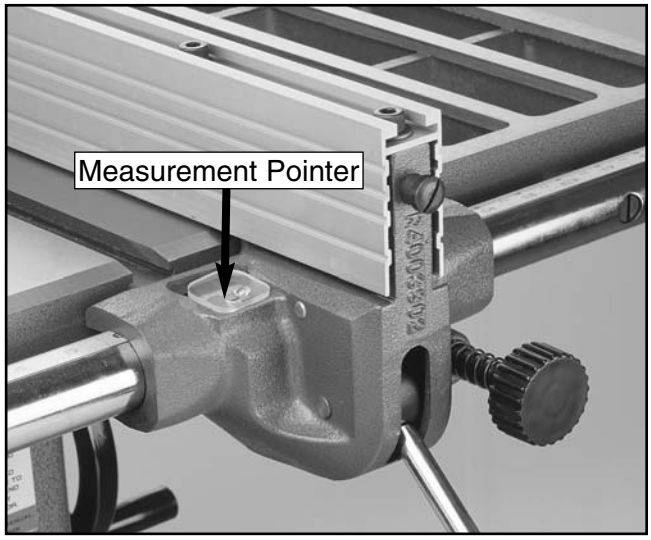

Figure 33. Adjust measurement pointer.

Tip: Attach a piece of ¾" thick hardwood to the blade side of the fence as shown in **Figure 34**. This will keep thin materials from wedging between the fence and table and will also protect the fence from coming in contact with the blade when dadoing or ripping thin stock. Remember to flip and adjust the measurement scale on the rail to compensate for the thickness of the sacrificial fence.

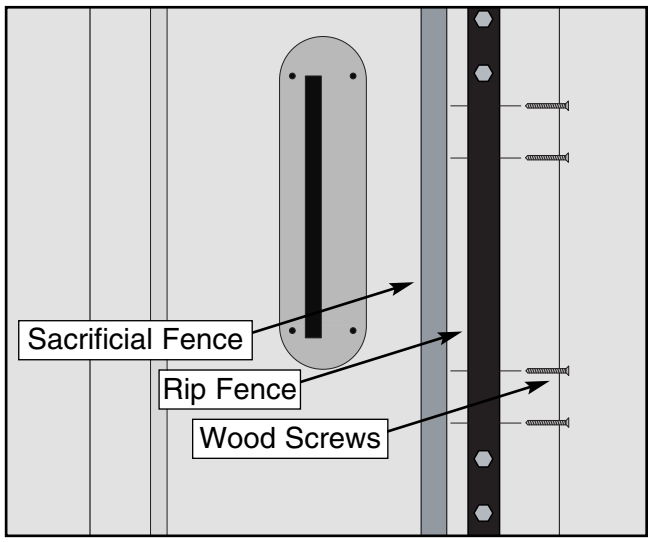

Figure 34. Attaching a sacrificial fence.

Blade

To install a saw blade:

1. **Disconnect the machine from the power source!!**

2. **The arbor nut has left-hand threads.** Unthread the arbor nut clockwise and remove the outside flange from the arbor. Remove and discard the ¾" diameter spacer on the arbor shaft.

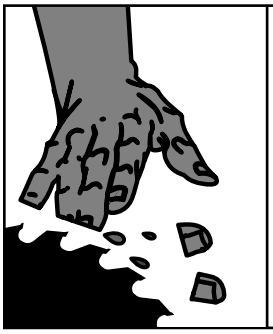

⚠WARNING

Use caution and remain alert when working with the saw blade. Failure to follow this warning could result in serious personal injury or death.

3. Install the saw blade onto the arbor. Ensure that the blade teeth point toward you as you stand at the front of the saw.

4. Slide on the flange and thread the arbor nut back on.

5. Use the arbor wrench provided with the saw to tighten the arbor nut. Wedge a block of wood in the teeth of the blade to keep it from turning when tightening the nut as shown in **Figure 35**.

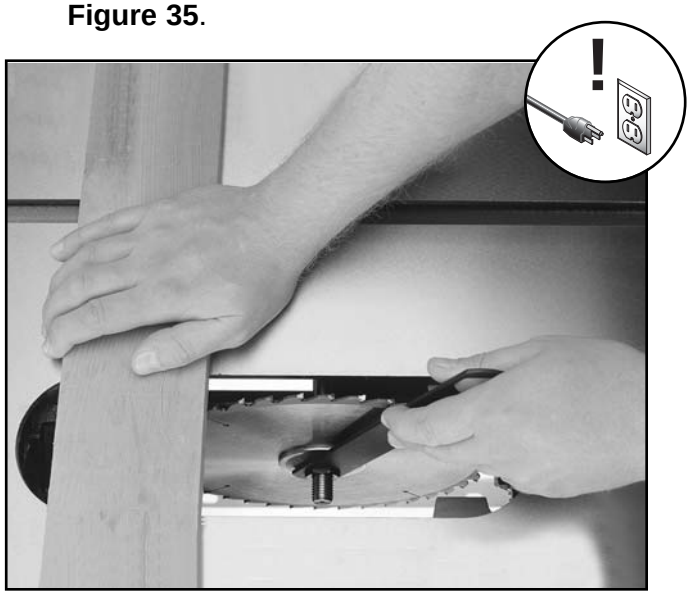

Figure 35. Changing saw blade.

Blade Guard

To install the blade guard:

1. **Disconnect the machine from the power source!!**

2. Screw the threaded end of the support shaft into the hole in the back of the rear trunnion. The check nut on the shaft will be used to tighten the shaft in place as shown in **Figure 36**. Leave it loose for now.

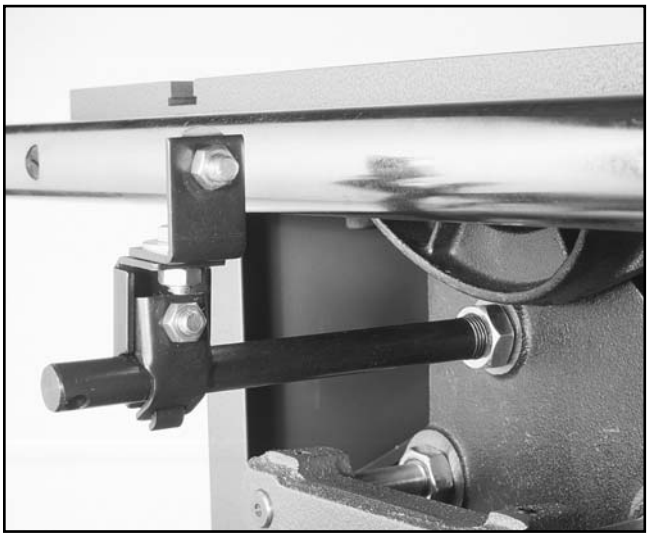

Figure 36. Installing blade guard.

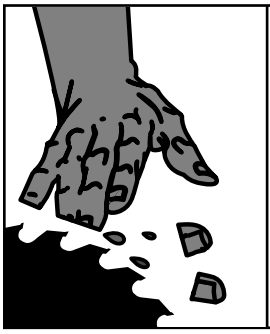

⚠WARNING

Use caution and remain alert when working around the saw blade. Failure to follow this warning could result in serious personal injury or death.

3. Loosen the blade-guard mounting bolt located just inside the table cut-out and the blade guard mounting bolt on the end of the support shaft.

4. Slip the slots at the bottom of the guard over the two mounting bolts as shown in **Figure 37**. The washers should be between the bolt head and the slots.

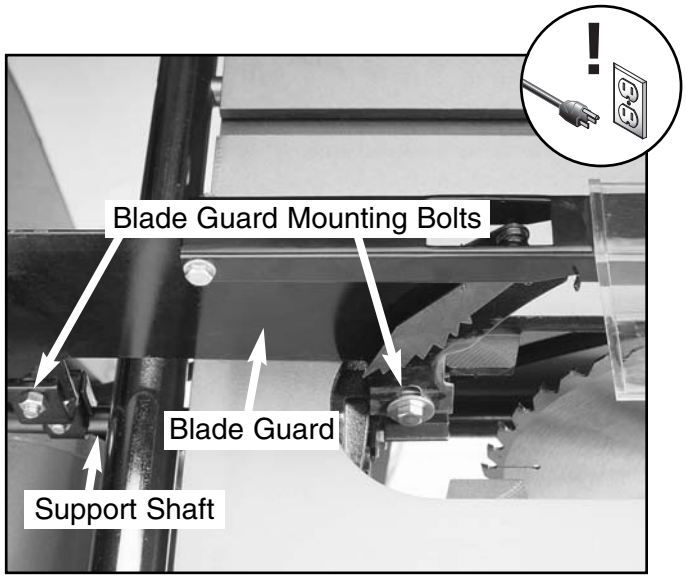

Figure 37. Blade guard components.

5. Rotate the support shaft to align the mounting bolts to the mounting slots on the guard.

6. Tighten the mounting bolts to secure the blade guard.

7. Using a machinist's or a combination square, align the face of the splitter perpendicular to the surface of the saw table as shown in **Figure 38**.

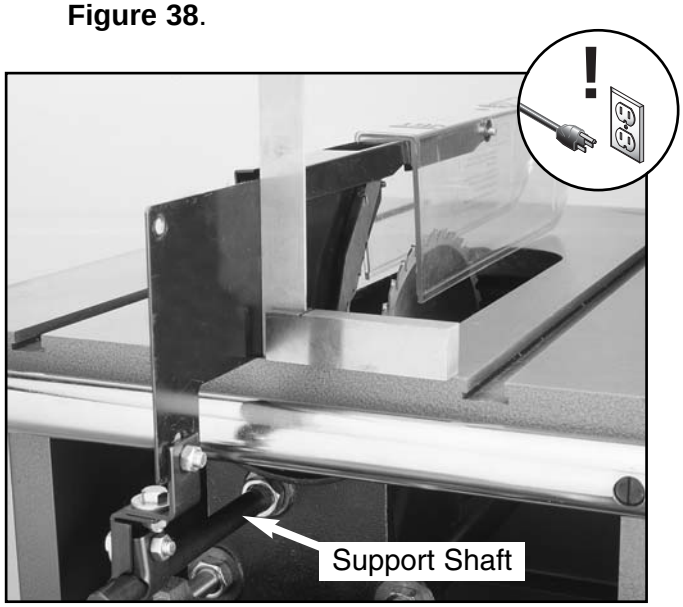

Figure 38. Adjusting blade guard.

8. Rotate the support shaft slightly. This will normally correct any minor misalignment.

9. Next, set a straightedge against the face of the saw blade and the blade guard/splitter as shown in **Figure 39**. If the blade guard/splitter is properly aligned, please skip ahead to the next section; otherwise, continue with the next step.

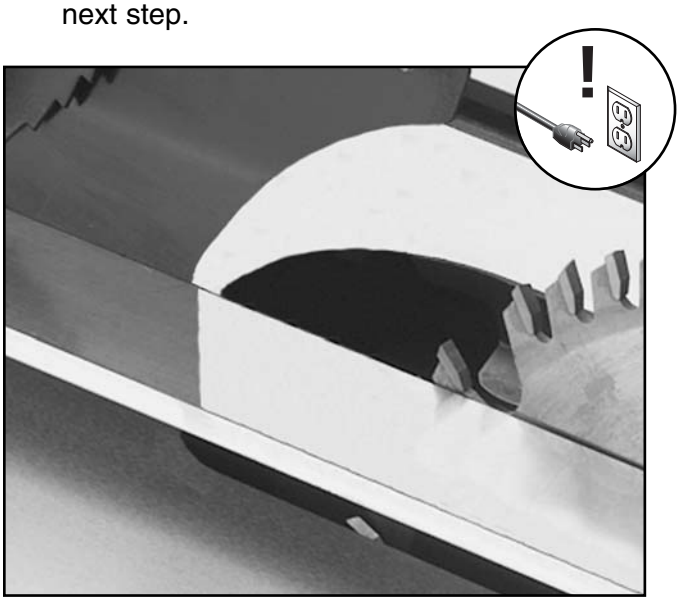

Figure 39. Checking alignment of blade guard.

10. If the blade guard/splitter is to the right of the blade as shown in **Figure 40**, add washers between the splitter and front mounting bracket and adjust the rear splitter support as shown in **Figure 40**.

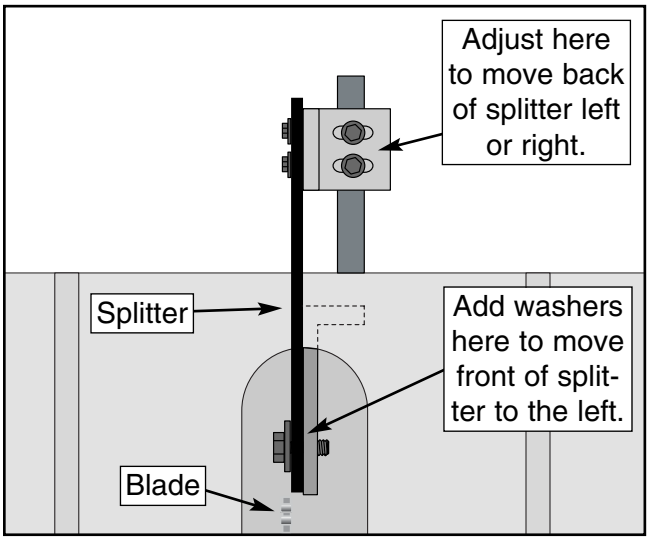

Figure 40. Improper splitter/blade alignment.

11. Recheck guard alignment to the blade and to the table top. Adjust as necessary and tighten all the bolts before use. If the blade guard is properly aligned, please skip ahead to the next section; otherwise, continue with the next step.

12. If the splitter is positioned to the left of the blade, alignment cannot be achieved by washer placement. Adjustment of the front support bracket is required as shown in **Figure 41**. Loosen the adjustment screws and move the front support bracket to the right.

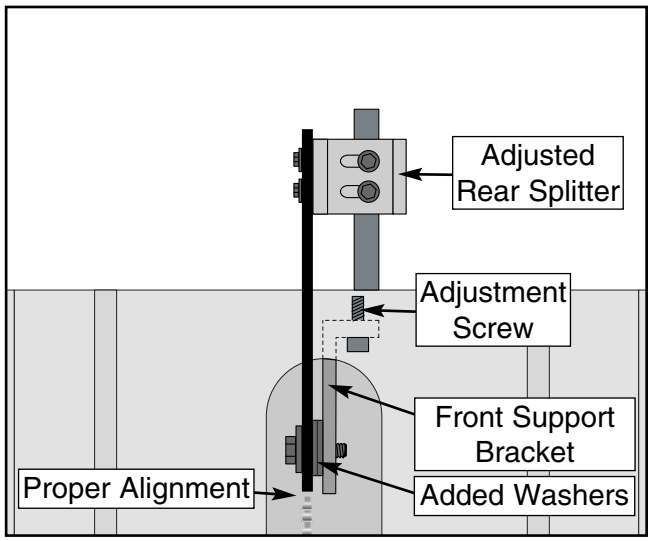

Figure 41. Proper splitter/blade alignment.

13. Recheck guard alignment to the blade and to the table top. Adjust as necessary and tighten down all the bolts before use.

14. Adjust the blade to 45° and raise and lower it through the full range. Re-adjust blade to 90° and raise and lower it through the full range. There should be no contact between the base and the table insert or any other part of the saw. If there is, repeat **Steps 1-13**.

Table Insert

The table insert provides support for the material being cut. It must be installed flush with the cast iron table surface.

To install the table insert:

1. **Disconnect the machine from the power source!**

2. Using the front handwheel, move the blade to its lowest position.

3. Set the table insert into the recessed area on the table surface.

4. Ensure that all four table insert setscrews are firmly in contact with the table casting.

5. Using an allen wrench, raise or lower each of the four setscrews until the insert is flush with the table top as shown in **Figure 42**.

6. Using the side handwheel, position the blade 90° to the table surface.

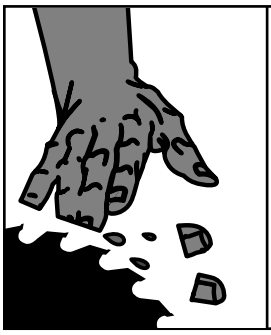

WARNING

Wear leather gloves when rotating the saw blade. Failure to follow this warning could result in serious personal injury or death.

7. Wearing leather gloves, rotate the blade while raising and lowering it through its full range of motion. Make sure it never contacts any part of the table insert.

8. Repeat **Step 6** with the blade in the 45° position.

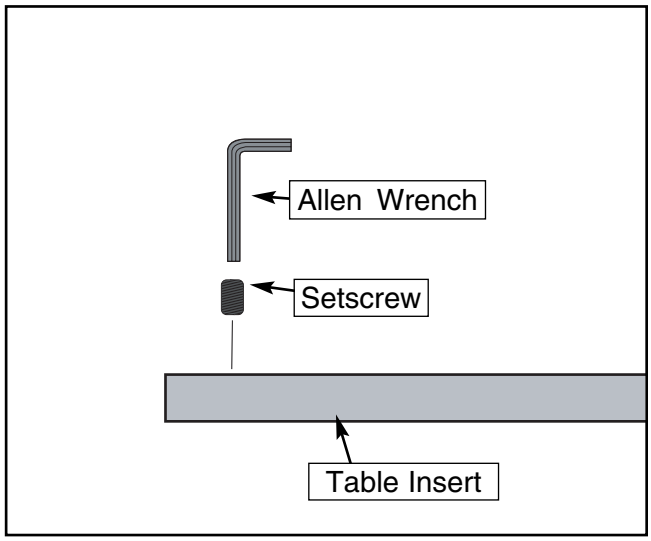

Figure 42. Adjusting table insert components.

Miter Gauge

Initial Step Models ZF, ZFX, PROZ, & PROZX:

The miter gauge for the Models ZF, ZFX, PROZ, & PROZX has two setscrews in the miter bar which can be set to remove any loose movement between the miter bar and the T-slot.

Loosen or tighten the two setscrews until the miter gauge slides freely in the slot, but has no loose movement.

Next steps for all models:

1. Loosen the lock knob on the miter gauge and place a square against the face of the miter body and the miter bar.

2. Adjust the miter body until there is no space between the square and the miter bar.

3. Tighten the lock knob.

4. With the stop link (**Figure 43**) in the up position, loosen the jam nut and adjust the stop screw until it is seated against the stop link.

5. Loosen the setscrew on the left front side of the miter bar, adjust the pointer to 90˚ and retighten the setscrew.

6. To adjust to 45˚, follow **Steps 1-5** while using an adjustable square.

7. After rotating the miter body from 45˚ to 90˚ and back a few times, double check your adjustments at both angles to ensure that you have accurately set your miter gauge.

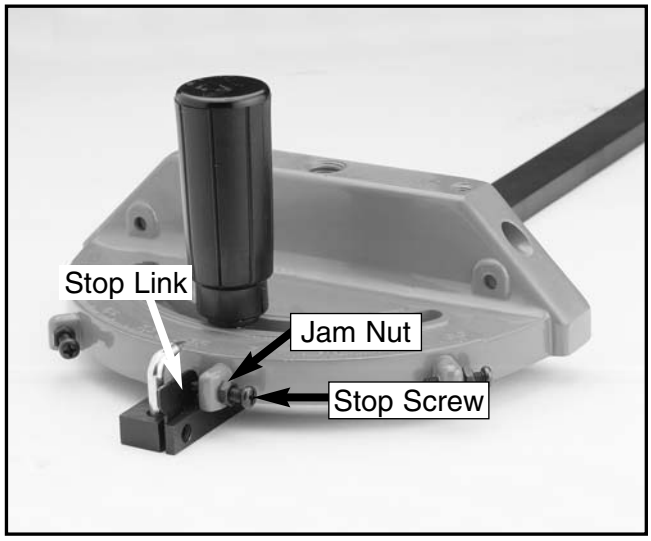

Figure 43. Miter gauge adjustment points.

Start Up

⚠WARNING

Loose hair and clothing could get caught in machinery causing serious personal injury. Keep loose clothing rolled up and long hair tied up and away from machinery.

⚠WARNING

Projectiles thrown from the machine could cause serious eye injury. Wear safety glasses during assembly.

Before starting the machine:

1. Read this manual and make sure you take all safety precautions before operating this machine.

2. Make sure the blade guard and splitter have been correctly installed and are adjusted properly as shown on **Pages 30-31**.

3. Make sure that any tools or foreign objects have been removed from the machine.

4. Review *Section 3: Circuit Requirements* beginning on **Page 9** and make sure all wiring is correct.

5. Keep your finger on the STOP button during the entire test run of the machine.

Starting the machine:

Turn the machine on and make sure your hand is on the STOP button in case you need to shut the machine off immediately. The machine should run smoothly with little or no vibration.

Recommended Adjustments

For your convenience, the adjustments listed below have been performed at the factory and no further setup is required to operate your machine.

However, because of the many variables involved with shipping, we recommend that you at least check the following adjustments to ensure the best possible results from your new machine.

All of these adjustments are covered in step-by-step detail in *Section 8: Service Adjustments*.

Recommended adjustment checklist:

- Blade Parallelism (**Page 49**)
- 45˚ Blade Stop (**Page 52**)
- 90˚ Blade Stop (**Page 52**)

SECTION 6: OPERATIONS

⚠WARNING

Wear safety glasses. a dust mask, and hearing protection while the machine is running. Failure to do this could result in serious personal injury.

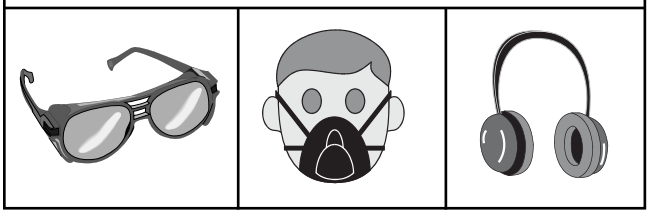

Blade Selection

Choosing the correct blade for the job is essential for the safe and efficient use of your table saw.

Rip Blade: Used for cutting with the grain. 10" rip blades have between 20-40 teeth (**Figure 44**), flat-top ground tooth profile (**Figure 49**) and large gullets to allow for large chip removal.

Figure 44. Ripping blade.

Cross-cut Blade: Used for cutting across the grain. 10" cross-cut blades have between 60-80 teeth (**Figure 45**), alternate top bevel or steep alternate top bevel tooth profiles (**Figure 49**), small hook angle and a shallow gullet.

Figure 45. Crosscutting blade.

Combination Blade: Used for cutting with and across the grain. A compromise between a rip blade and a cross-cut blade, a 10" combination blade will typically have between 40-50 teeth (**Figure 46**), an alternate top bevel and flat or alternate top bevel (**Figure 49**) and raker tooth profile. The teeth are arranged in groups of five. The gullets are small and shallow within the groups of five teeth, similar to a cross-cut blade; then large and deep between the groups, like a ripping blade.

Figure 46. Combination blade.

Plywood Blade: Used for cutting plywood or veneers. 10" plywood blades have 40-80 teeth (**Figure 47**), a steep alternate top bevel tooth profile (**Figure 49**) and very shallow gullet.

Figure 47. Plywood blade.

Thin-kerf: Designed for saws with smaller motors and for reducing material waste, thin-kerf blades are thinner than standard blades. Performance and accuracy can be maintained by the use of blade stabilizers.

⚠WARNING

Some blade guards/splitters are thicker than thin-kerf blades. DO NOT use the thin-kerf blade if this is the case or serious personal injury could result.

Dado Blades: There are two types of dado blades: stacked and wobble.

- Stacked Dado Blade—These dedicated dado cutting blades consist of a set of up to 8 individual blades. Multiple cutters are "stacked" between two outside blades. The width of the dado is determined by the combination of cutters that are “stacked” together. The dado is cut in a single pass leaving a smooth and square channel in the face of the workpiece as shown on **Page 40**. Stacked dado blades are the most expensive option but are worth considering if your projects require a lot of visible dado cuts. A typical stacked dado blade is shown in **Figure 48**.

Figure 48. Optional dado blade.

- Wobble Dado Blade—Also a dedicated dado blade, a wobble blade usually consists of a single blade that is tilted on the arbor shaft while it is spinning. The channel is cut in the face of the workpiece as the blade passes through its pre-adjusted width of travel. Wobble blades are an inexpensive option when visibly pleasing channels are not a concern.

Moulding Heads: A moulding head is a cutterhead that attaches to the arbor and holds individual moulding knives. They should only be used by professional woodworkers with training beyond the scope of this manual.

This section on blade selection is by no means comprehensive. Always follow the saw blade manufacturer's recommendations to ensure safe and efficient operation of your table saw.

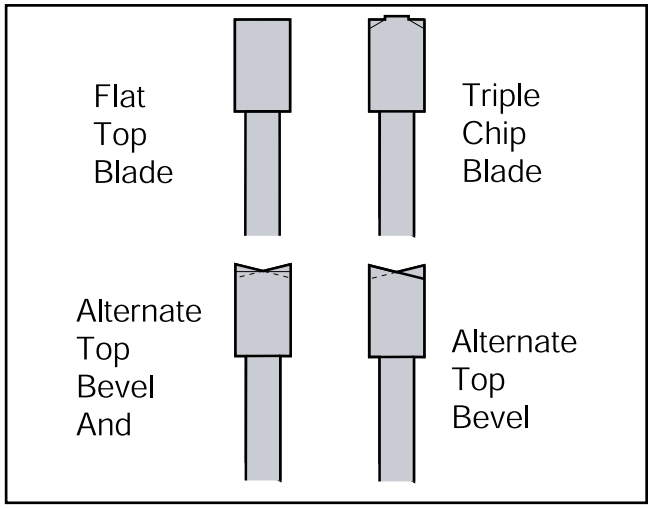

Figure 49. Various saw tooth cutting profiles.

Crosscutting

A crosscut is a cut against the grain direction of the workpiece. Crosscutting man-made wood products like plywood is performed by cutting parallel to the shortest side.

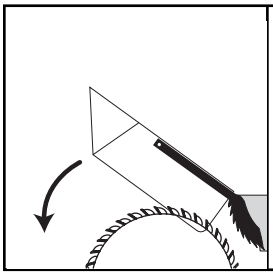

WARNING

Keep the blade guard in the down position at all times. Failure to do this could result in serious personal injury or death.

To make a 90˚ crosscut using the miter gauge:

1. Adjust the miter gauge to the 90˚ position.
2. Adjust the fence completely away from the cutting operation.
3. Position the miter gauge in one of the two miter slots.
4. Adjust the blade height so the highest saw tooth protrudes approximately ¼" above the workpiece.
5. Hold the workpiece against the miter gauge and line up the cut with the blade.
6. Turn on the saw and allow it to come to full speed.
7. Hold the workpiece firmly against the face of the miter gauge and ease it into the blade as shown in **Figure 50**.

WARNING

Turn off the saw and allow the blade to come to a complete stop before removing the cut-off piece. Failure to follow this warning could result in serious personal injury

Figure 50. Cross-cut operation.

Ripping

A rip cut is a cut with the grain direction of the workpiece. Ripping man-made wood products like plywood is performed by cutting parallel to the longest side.

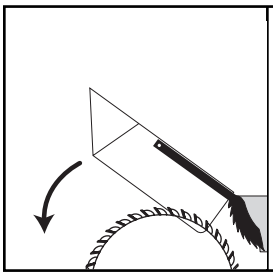

WARNING

Keep the blade guard in the down position at all times. Failure to do this could result in serious personal injury or death.

To make a rip cut:

1. Set the fence to the desired width of cut on the fence rail scale.

2. Adjust the blade height so the highest saw tooth protrudes approximately ¼" above the workpiece.

3. Joint one long edge of the workpiece on a jointer.

4. Set up any safety devices such as feather-boards or other anti-kickback devices.

5. **With the saw unplugged from the power source**, rotate the blade to make sure it does not come into contact with any of the safety devices.

6. Plug the saw into the power source, and turn on the saw and allow it to come to full speed.

7. The jointed edge of the workpiece must be slide against the fence during the cutting operation.

WARNING

Stand to the left of the blade line-of-cut when ripping a board. Serious personal injury could occur if kickback results.

8. Using a push stick, feed the workpiece through the saw blade as shown in **Figure 51**, until the workpiece is completely past the saw blade. *When a small width is to be ripped and a push stick cannot be safely put between the blade and rip fence, rip a larger piece to obtain the desired piece.*

Figure 51. Ripping operation.

WARNING

Turn off the saw and allow the blade to come to a complete stop before removing the cut-off piece. Failure to follow this warning could result in serious personal injury

Dado Cutting

Commonly used in furniture joinery, a dado is a straight channel cut in the face of the workpiece. Dadoes can be cut using either a dado blade (**Figure 57**) or a standard saw blade.

WARNING

Dado operations present very real hazards requiring proper procedures to avoid serious injury. The chance of kickback is always greater when dado blades are used so extra care must be taken. Any movement of the stock away from the fence will cause kickback. Be certain that stock is flat and straight. Failure to follow these warnings could result in serious personal injury.

To use a stacked or wobble dado blade:

1. **Disconnect the machine from the power source!**

2. Remove the table insert, splitter guard, and regular saw blade.

3. Attach and adjust the dado blade system as recommended in the dado blade manufacturer's instructions.

4. Install the dado table insert.

5. Raise the dado blade up to the desired depth of cut (depth of dado channel desired).

WARNING

Never perform a through cut operation with a dado blade. A dado blade was designed to make non-through cuts only. Failure to follow this warning could result in serious personal injury.

6. If dadoing along the long length of your workpiece, adjust the distance between the fence and the inside edge of the blade to suit your needs as shown in **Figure 52**.

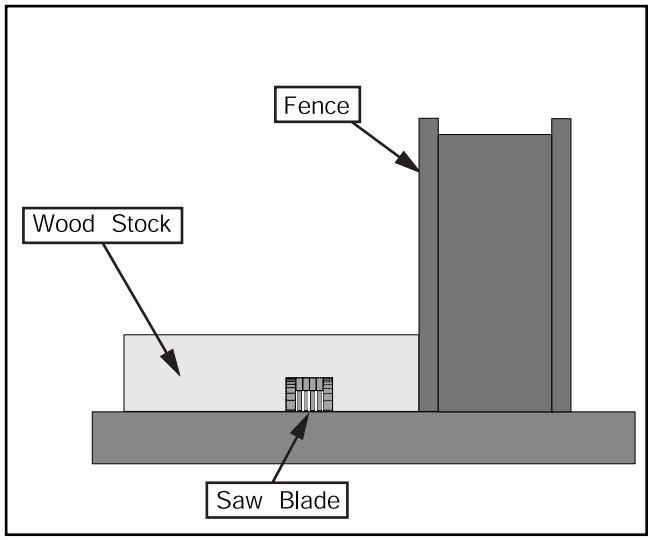

Figure 52. Single-blade dado cut.

WARNING

Never allow hands or arms to be above or behind the saw blade. Should kickback occur, the hands and arms could be pulled into the saw blade causing serious personal injury.

WARNING

Always use push sticks, featherboards, push paddles and other safety accessories whenever possible to increase safety and control during operations which require the blade guard and splitter to be removed from the saw. Failure to follow this warning could result in serious personal injury.

7. Reconnect the saw to the power source.

8. With one finger ready to push the OFF button, turn the saw on. The blade should run smooth with no vibrations or wobbling.

9. When the blade has reached full speed, perform a test cut with a scrap piece of wood.

10. If the cut is satisfactory, repeat with your finish stock.

⚠WARNING

ALWAYS replace the blade guard after dadoing is complete. Failure to follow this warning could result in serious personal injury.

Using a standard saw blade:

1. Clearly mark the width of the dado cut on your workpiece. *Include marks on the edge of your workpiece so you can clearly identify your intended cut while the material is laying flat on the saw table.*

2. Raise the blade up to the desired depth of cut (depth of dado channel desired).

3. If dadoing along the long length of your workpiece, adjust the fence so the blade is aligned with the inside of your dado channel as shown in **Figure 53**.

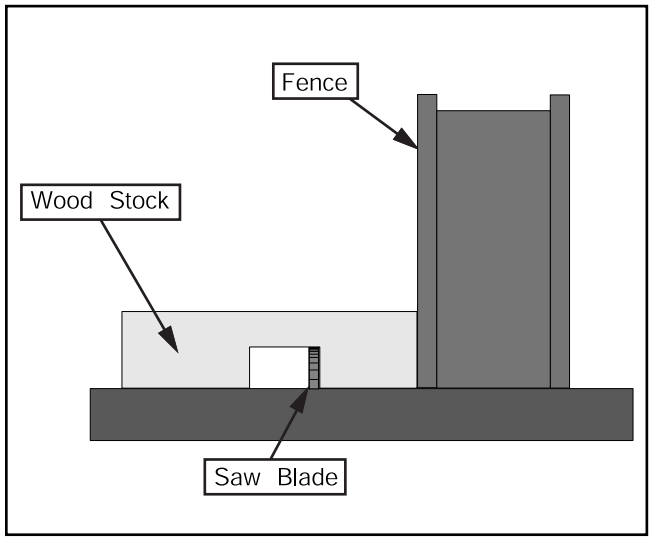

Figure 53. Single-blade dado cut.

⚠WARNING

Never allow hands or arms to be above or behind the saw blade. Should kickback occur, the hands and arms could be pulled into the saw blade causing serious personal injury.

⚠WARNING

Always use push sticks, featherboards, push paddles and other safety accessories whenever possible to increase safety and control during operations which require the blade guard and splitter to be removed from the saw. Failure to follow this warning could result in serious personal injury.

4. Turn on the saw and allow the blade to reach full speed.

5. Perform a test cut on a scrap piece of wood. Determine if the depth of cut is correct.

6. If the cut is satisfactory, repeat with your finish stock.

⚠WARNING

Always turn the saw off and wait until the blade has come to a complete stop before adjusting the fence. Failure to follow this warning could result in serious personal injury.

7. Re-adjust the fence so the blade is aligned with the other edge of the intended dado channel. *Be sure to keep the cuts within your marks; otherwise, the dado will be too big.*

8. Continue making cuts toward the center of the dado with your subsequent cuts until the dado is complete.

WARNING

Always replace the blade guard after dadoing is complete. Failure to follow this warning could result in serious personal injury.

Rabbet Cutting

Commonly used in furniture joinery, a rabbet is a straight groove cut in the edge of the workpiece. Rabbets can be cut using either a dado blade (**Figure 49**) or a standard saw blade.

WARNING

Rabbet operations present very real hazards requiring proper procedures to avoid serious injury. The chance of kickback is always greater when dado blades are used so extra care must be taken. Any movement of the stock away from the fence will cause kickback. Be certain that stock is flat and straight. Failure to follow these warnings could result in serious personal injury.

To attach a sacrificial fence:

Rabbet cutting with a dado blade requires the use of a sacrificial fence attachment as shown in **Figure 54**.

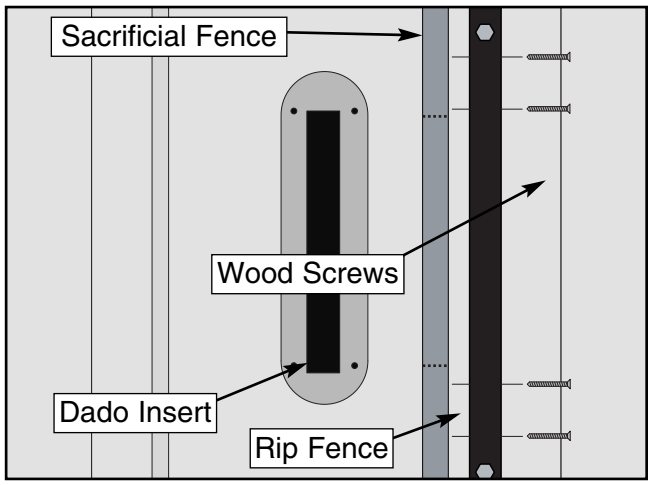

Figure 54. Sacrificial fence.

1. **Disconnect the machine from the power!**

2. Cut a piece of wood that is as long and tall as the metal fence and ¾" thick. This will be the sacrificial fence. Make sure the wood is a uniform thickness and free of knots and defects.

3. Attach the sacrificial fence to the metal fence with screws or clamps.

4. Remove the blade guard/splitter assembly, the table insert, and the regular saw blade from the arbor.

5. Install and adjust the dado blade system as recommended in the dado blade instructions.

6. Adjust the saw blade to maximum height needed for the rabbeting operation.

7. Raise the blade an additional ¼".

8. Slide the metal fence with the attached sacrificial fence along side the blade.

9. Using a felt pen, draw the blade profile onto the sacrificial fence.

10. Remove the sacrificial fence from the metal fence.

11. Using a bandsaw or jig saw, cut the marked blade profile from the sacrificial fence.

12. Re-attach the sacrificial fence to the metal fence with screws or clamps.

13. Slide the fence assembly over the saw blade. The blade should **NOT** touch the sacrificial fence.

Cutting rabbets with the dado blade:

1. Adjust the saw blade to the maximum height needed for the rabbeting operation.

⚠WARNING

Never perform a through cut operation with a dado blade. A dado blade was designed to make non-through cuts only. Failure to follow this warning could result in serious personal injury.

2. If rabbeting along the long length of your workpiece, adjust the distance between the fence and the workpiece to suit your needs as shown in **Figure 55**.

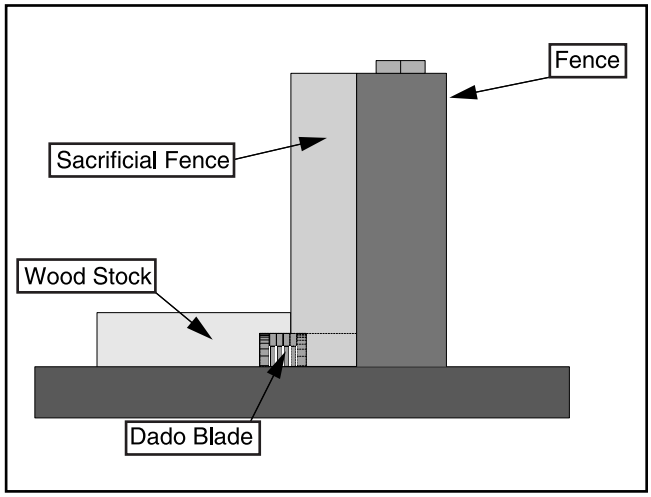

Figure 55. Rabbet cutting.

WARNING

Never allow hands or arms to be above or behind the saw blade. Should kickback occur, the hands and arms can be pulled into the saw blade. Serious personal injury could result.

WARNING

Always use push sticks, featherboards, push paddles and other safety accessories whenever possible to increase safety and control during operations which require the blade guard and splitter to be removed from the saw. Failure to follow this warning could result in serious personal injury.

3. Reconnect the saw to the power source and turn the saw on.

4. When the blade has reached full speed, perform a test cut with a scrap piece of wood.

5. If the cut is satisfactory, repeat with your finish stock.

WARNING

Always replace the blade guard after rabbet cutting is complete. Failure to follow this warning could result in serious personal injury.

Cutting rabbets with the standard blade:

Cutting rabbets with a standard saw blade DOES NOT require the use of a sacrificial fence.

1. Clearly mark the width of the rabbet cut on your workpiece. *Include marks on the edge of your workpiece so you can clearly identify your intended cut while the material is laying flat on the saw table.*

2. Raise the blade up to the desired depth of cut (depth of rabbet channel desired).

3. If the rabbet runs the length of the material, adjust the fence so the blade is aligned with the inside of your rabbet channel as shown in **Figure 56**.

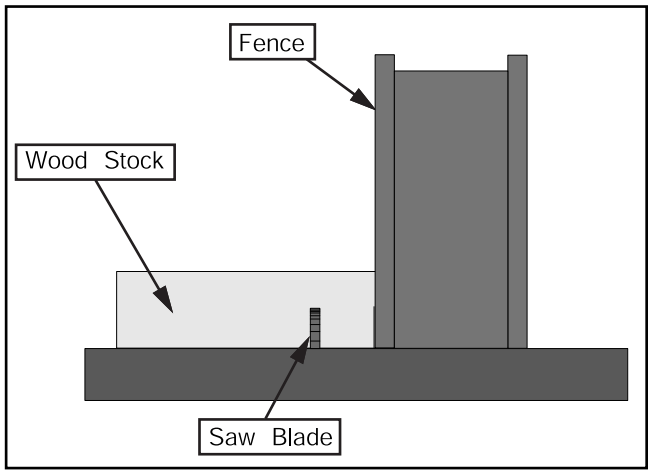

Figure 56. Rabbet cutting.

⚠WARNING

Never allow hands or arms to be above or behind the saw blade. Should kickback occur, the hands and arms can be pulled into the saw blade. Serious personal injury could result.

⚠WARNING

Always use push sticks, featherboards, push paddles and other safety accessories whenever possible to increase safety and control during operations which require the blade guard and splitter to be removed from the saw. Failure to follow this warning could result in serious personal injury.

4. Turn the saw on.

5. When the blade has reached full speed, perform a test cut with a scrap piece of wood.

6. If the cut is satisfactory, repeat with your finish stock.

⚠WARNING

Always turn the saw off and wait until the blade has come to a complete stop before adjusting the fence. Failure to follow this warning could result in serious personal injury.

7. Rotate the workpiece as shown in **Figure 57**.

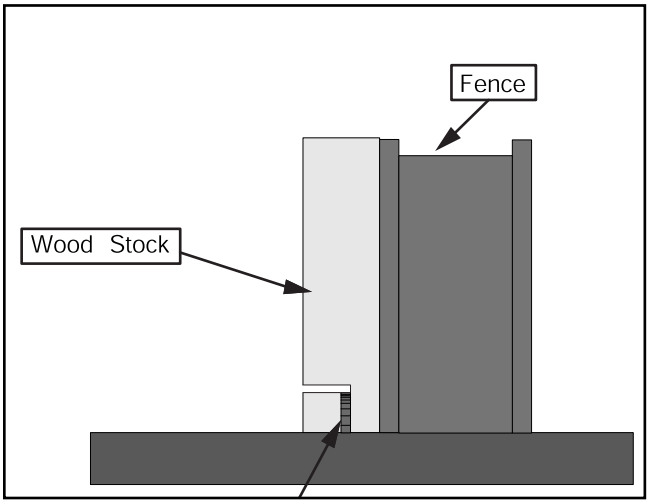

Figure 57. Rabbet cutting.

8. Perform the second cut to complete the rabbet cut.

⚠WARNING

Always replace the blade guard after dadoing is complete. Failure to follow this warning could result in serious personal injury.

SECTION 7: MAINTENANCE

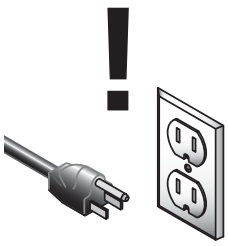

⚠WARNING

Disconnect power to the machine when performing any maintenance on the table saw. Failure to do this could result in serious personal injury.

⚠WARNING

Loose hair and clothing could get caught in machinery causing serious personal injury. Keep loose clothing rolled up and long hair tied up and away from machinery.

⚠WARNING

Projectiles thrown from the machine could cause serious eye injury. Wear safety glasses during assembly.

General

Regular periodic maintenance on your Model G1022 Series Table Saw will ensure its optimum performance. Make a habit of inspecting your machine each time you use it.

Check for the following conditions and repair or replace when necessary:

1. Loose mounting bolts.
2. Worn switch.
3. Worn or damaged cords and plugs.
4. Damaged V-belt.
5. Any other condition that could hamper the safe operation of this machine.
6. Inspect blades for damage.
7. Guard alignment and operation.

Lubrication

The sealed ball bearings in the motor and throughout the Model G1022 require no maintenance during their lifetime. When they do wear out, replacements can be obtained through the Grizzly Parts Department.

Lubricate the areas indicated below every 12 months:

BLADE ANGLING TRUNNION—The front and back trunnions each have a semi-circle groove that needs to be lubricated with an automotive wheel bearing grease.

BLADE HEIGHT TRUNNION—The blade height trunnion pivots on a steel rod. This should be lubricated with 6 or 7 drops of light machine oil.

WORM GEARS (**Figure 58**)—These should be lubricated with an automotive wheel bearing grease.

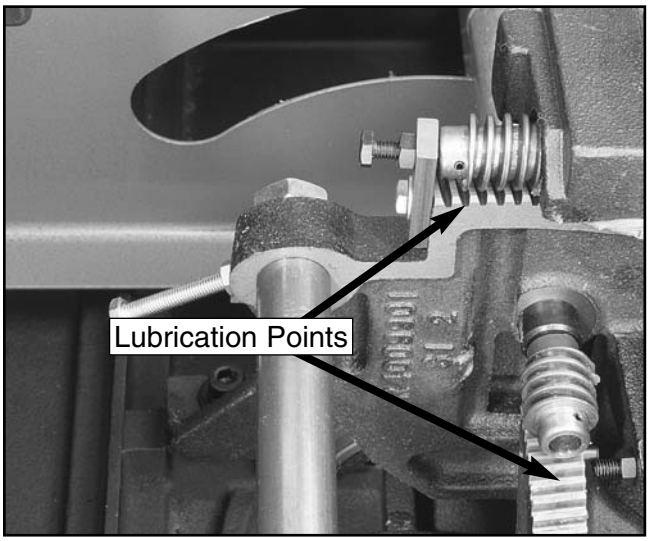

Figure 58. Worn gear lubrication points.

Table

The table is made from cast iron. If preventative measures are not taken, the table surface will rust. Regularly wipe sawdust from the table to prevent rust causing moisture from becoming trapped against the table. Regular applications of products like SLIPIT® will prevent rust as the saw is used on a daily basis. For long term storage, use products such as Boeshield T-9®. Both of these products are available in the Grizzly catalog.

V-Belt

Inspect the V-belt regularly for tension and wear. Check the pulleys to ensure they are correctly aligned. Refer to *Section 5: Set Up* beginning on **Page 23** for instructions on adjusting the V-belt.

Maintenance Log

Date	Approximate Hours Of Use	Maintenance Performed

Blade Parallelism

The Model G1022 Series Table Saws will perform best when the miter slot is parallel to the blade.

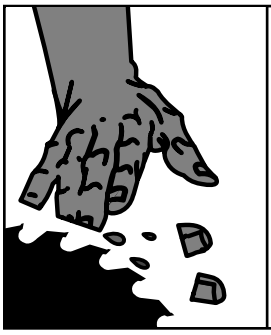

WARNING

Use caution and remain alert when working around the saw blade. Failure to follow this warning could result in serious personal injury or death.

To check and adjust blade parallelism:

1. **Disconnect the machine from the power source!!**

2. Tilt the blade to 90˚. Using an adjustable square, measure the distance (A) between the miter slot and the front of the blade as shown in **Figure 59**.

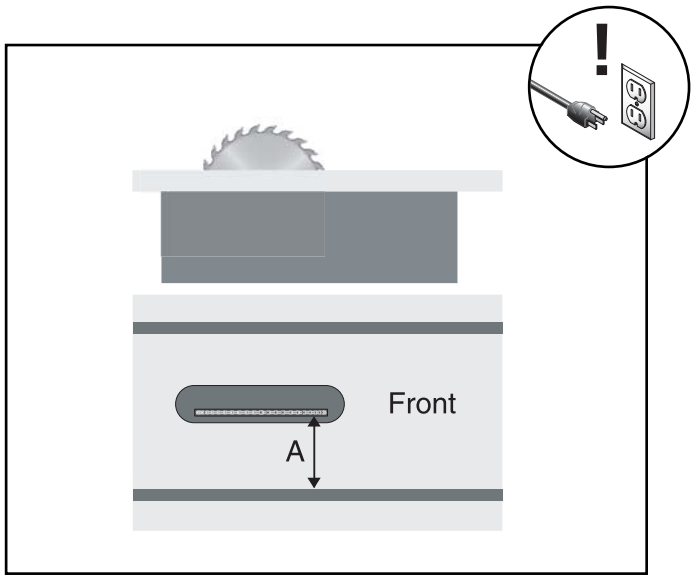

Figure 59. 90° blade parallelism measurement.

3. **Rotate the blade 180°** and measure the distance (B) between the miter slot and the back of the blade as shown in **Figure 60**.

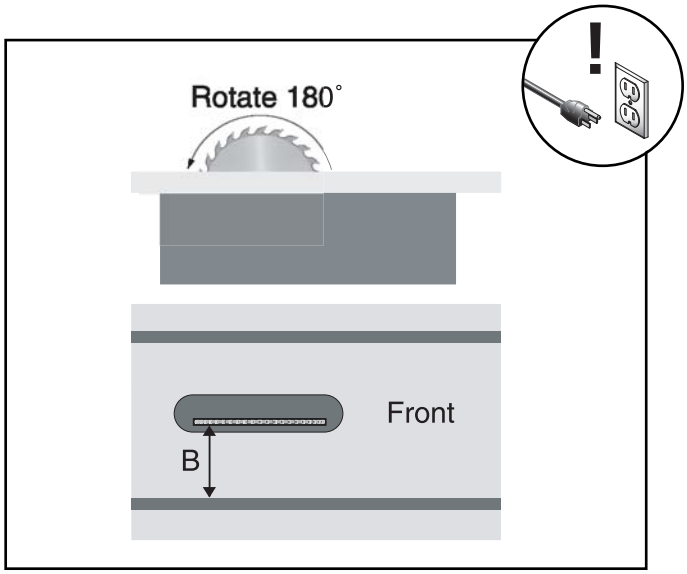

Figure 60. 90° blade parallelism measurement.

4. Make note of the difference between the two measurements on a piece of paper.

5. Tilt the blade to 45° and repeat **Steps 2-4**.

6. If the difference was less than 0.004" when the blade was positioned at 90˚ and 45˚, skip to the next section. Otherwise, continue on.

7. If the difference was greater than 0.004" when the blade was positioned at 90˚ or 45˚, the trunnion assembly below the table needs to be adjusted.

8. Remove the saw assembly from the stand.

9. Remove the motor, the fence, the extension wings, and the saw blade.

10. Place the saw assembly upside down on 4x4 blocks to allow the saw blade to rotate freely.

11. Remove the handwheels and the sheet metal body.

12. To maintain the trunnion assembly as one unit, place a bar clamp across the entire trunnion assembly as shown in **Figure 61**.

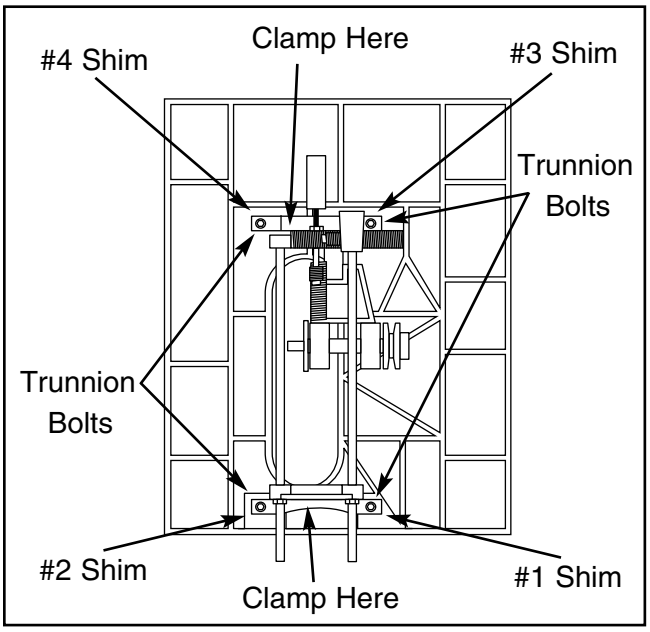

Figure 61. Underside view of table/trunnion assembly.

If the blade was not parallel in the 90˚ position, the correction can be made by loosening the trunnion bolts and shifting the internal components accordingly.

To shift the trunnion:

1. Loosen the trunnion bolts.

2. Move the trunnion assembly according to the difference measured when the blade was in the 90˚ position.

3. Tighten the trunnion bolts.

If the blade was not parallel in the 45˚ position, the correction can be made by shimming between the trunnion and the bottom of the table surface as shown in **Figure 62**.

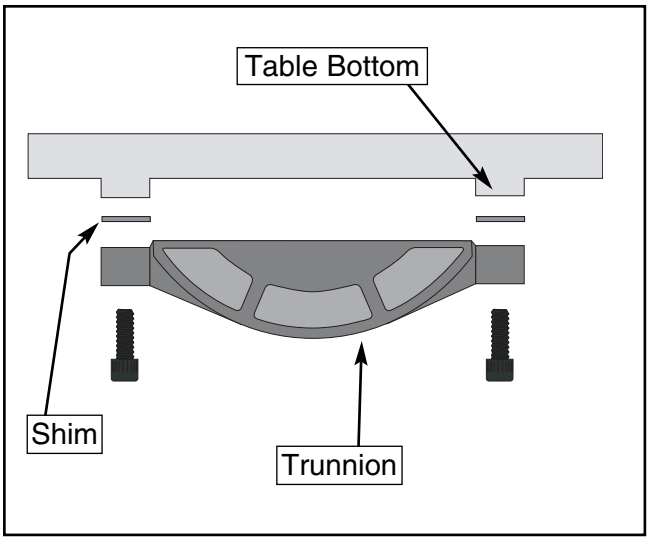

Figure 62. Shim placement.

To shim the trunnion:

1. Loosen the trunnion bolts.

2. Using **Figures 63 & 64**, shim the trunnion assembly according to the difference measured when the blade was in the 45˚ position.

   If the distance of A is shorter than B, shim(s) will need to be placed under corners #1 and #2.

   If the distance of B is shorter than A, shim(s) will need to be placed under corners #3 and #4.

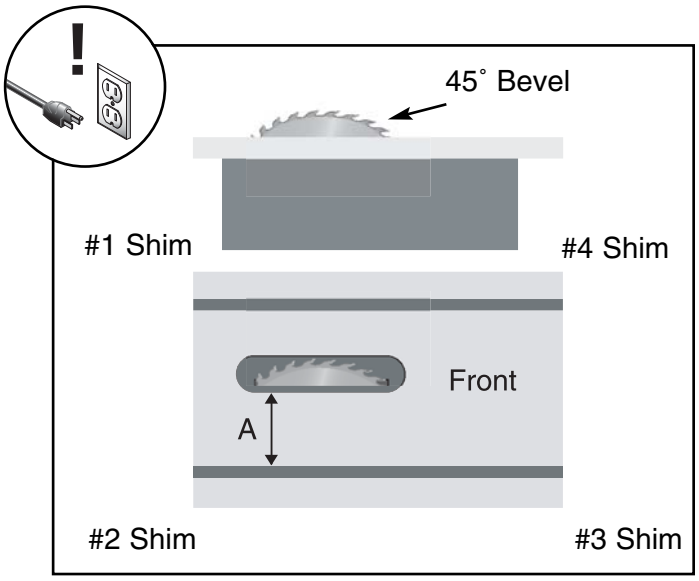

Figure 63. 45° blade parallelism measurement.

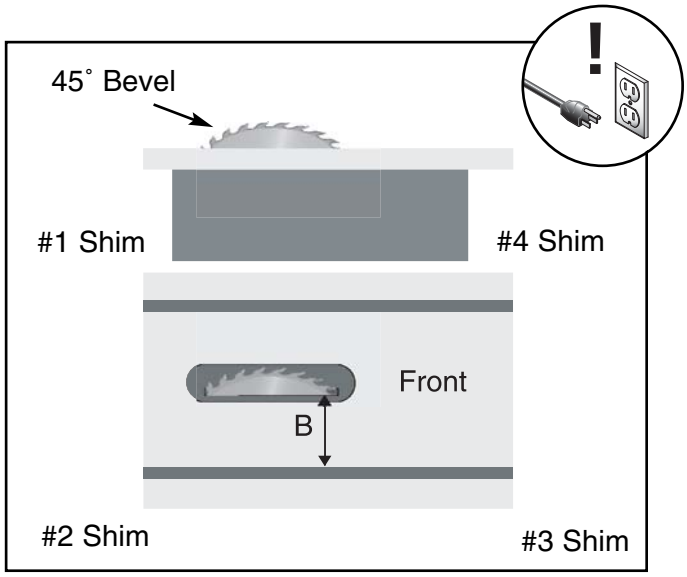

Figure 64. 45° blade parallelism measurement.

3. Tighten down one trunnion bolt a small amount and then move on to each of the others, tightening each down the same amount.

4. Continue to rotate through the bolts, tightening them a little each time until they are all secure.

5. Re-assemble the saw assembly onto the stand.

6. Recheck the blade to miter slot distance at 90° and 45°. If the distance of A and B are equal to or less than 0.004" at both 90° and 45°, continue to the next section. If the distances are still off by more than 0.004", repeat the previous procedures.

7. Once you feel you have the miter slot adjusted parallel to the blade, recheck all measurements and be sure the table mounting bolts are secure.

8. Repeat **Step 10** on **Page 31**.

NOTICE

If the trunnion assembly is loosened in the future, make note of the shim locations and re-assemble accordingly.

45° & 90° Stops

The Model G1022 Series Table Saws are equipped with positive stops at 45° and 90°. When properly adjusted, they provide precise and dependable guides for bevel adjustment.

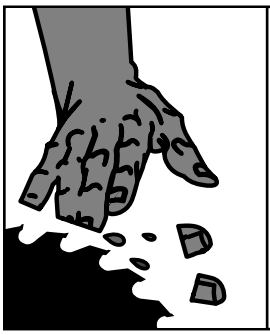

⚠WARNING

Use caution and remain alert when working around the saw blade. Failure to follow this warning could result in serious personal injury or death.

To set the 45° & 90° stops:

1. **Disconnect the machine from the power source!!**

2. Raise the saw blade to its maximum height by turning the front handwheel clockwise.

3. Adjust the blade to the 90° position.

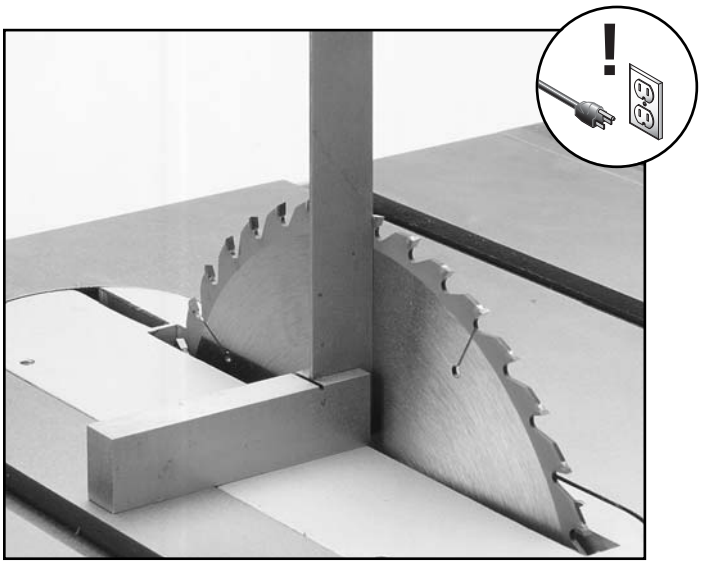

Figure 65. Checking blade angle to table.

5. With the square in place, inspect for gaps along the blade and square.

6. If a gap exists at either the top or the bottom of the square, loosen lock nut (A) and adjustment bolt (B) shown in **Figure 66**.

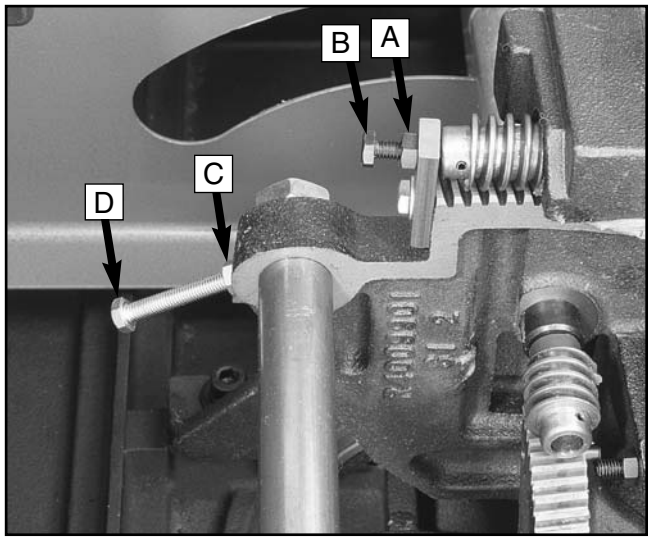

Figure 66. 90° and 45° stop bolt adjustments.

7. Turn the handwheel until the blade and square are flush from top to bottom.

8. Snug the adjustment screw and tighten the lock nut.

9. Recheck the blade with the square to ensure the screw has not been over-tightened.

10. Using the side handwheel, adjust the blade bevel until you hit the 45° positive stop. Check the bevel with an adjustable square set to 45°.

11. If variations exist, loosen the lock nut (C) and adjust the stop bolt (D) (**Figure 66**) until your blade and square match.

12. Tighten the lock nut and recheck the bevel by adjusting the blade back to 90°, then back to 45°.

SECTION 9: CLOSURE

The following pages contain general machine data, parts diagrams/lists, a troubleshooting guide and Warranty/Return information.

If you need parts or help in assembling your machine, or if you need operational information, call the Grizzly Service Department. Trained service technicians will be glad to help you.

If you have any comments regarding this manual, please write to Grizzly at the address below:

Grizzly Industrial, Inc.
C/O Technical Documentation
P.O. Box 2069
Bellingham, WA 98227-2069

Important safety measures that are essential to the operation of this machine have been explained in *Section 1: Safety*. While most safety measures are generally universal, Grizzly reminds you that each workshop is different and safety rules should be considered as they apply to your specific situation.

We recommend you keep a copy of our current catalog for complete information regarding Grizzly's warranty and return policy. If you need additional technical information relating to this machine, or if you need general assistance or replacement parts, please contact the Service Department at the location listed below.

Grizzly Industrial, Inc.
1203 Lycoming Circle
Muncy, PA 17756
Phone: (570) 546-9663
Fax: (800) 438-5901
E-Mail: techsupport@grizzly.com
Web Site: http://www.grizzly.com.

Additional information sources are necessary to realize the full potential of this machine. Trade journals, woodworking magazines, and your local library are good places to start.

SM AND Z WIRING DIAGRAM

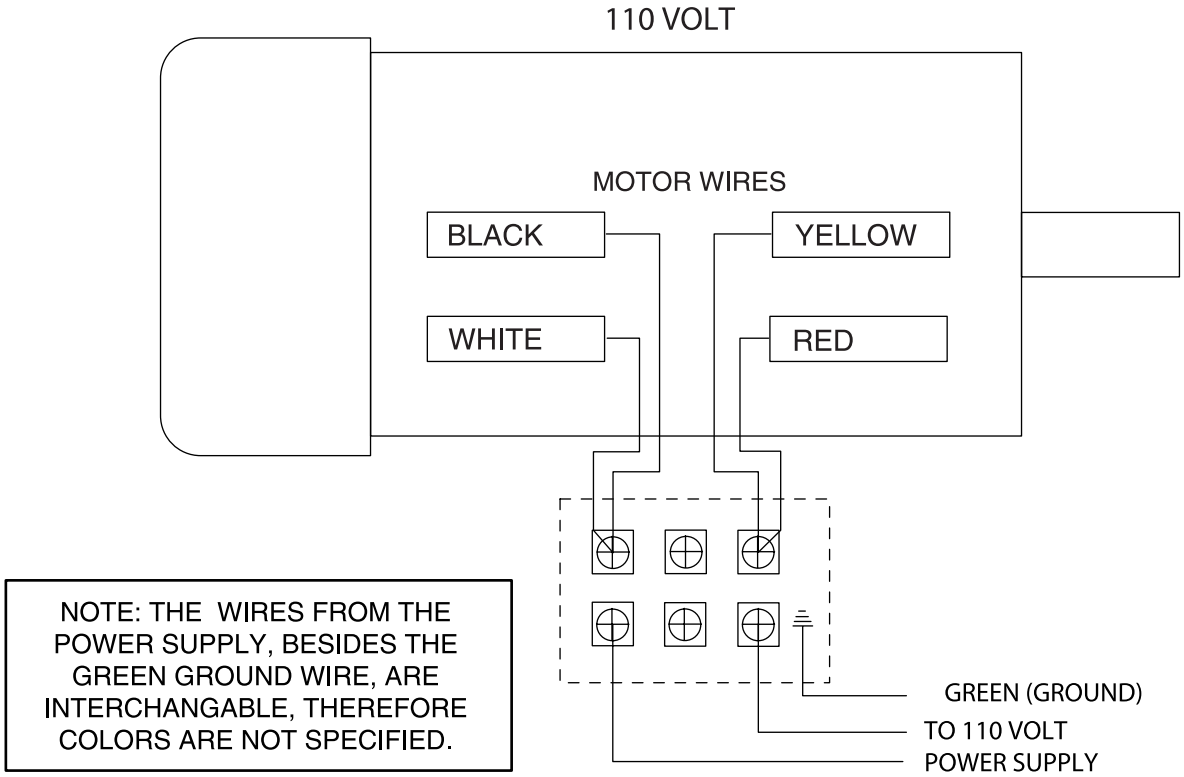

NOTE: THE WIRES FROM THE POWER SUPPLY, BESIDES THE GREEN GROUND WIRE, ARE INTERCHANGABLE, THEREFORE COLORS ARE NOT SPECIFIED.

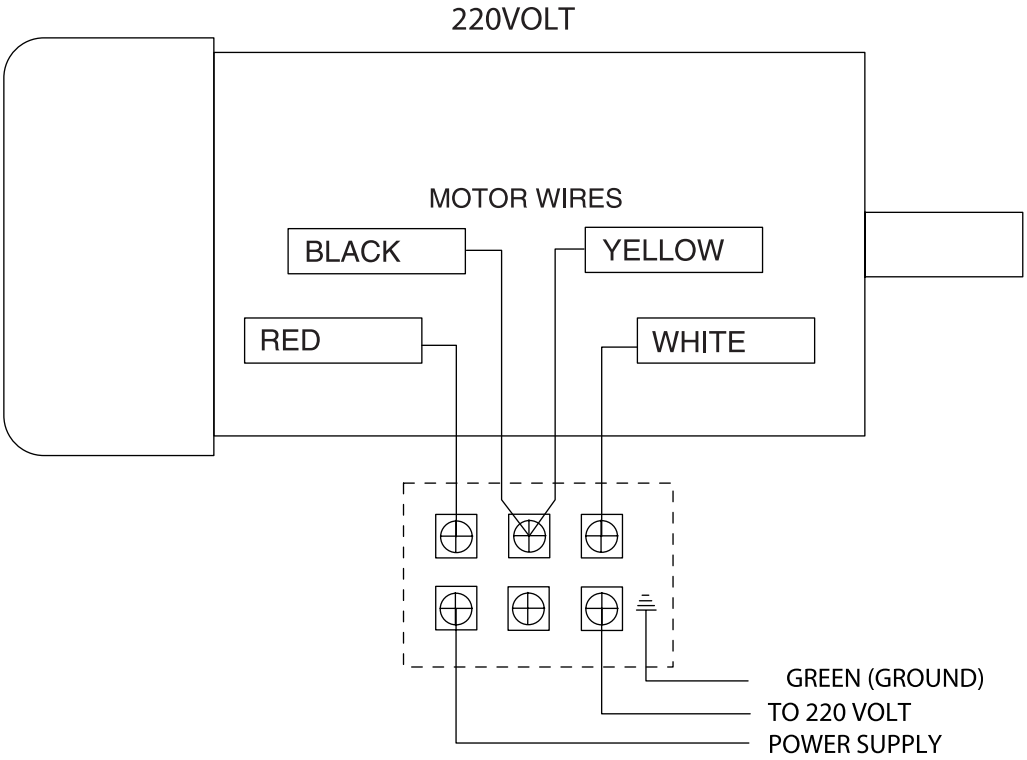

6

ZF, ZFX, PROZ & PROZX WIRING DIAGRAM

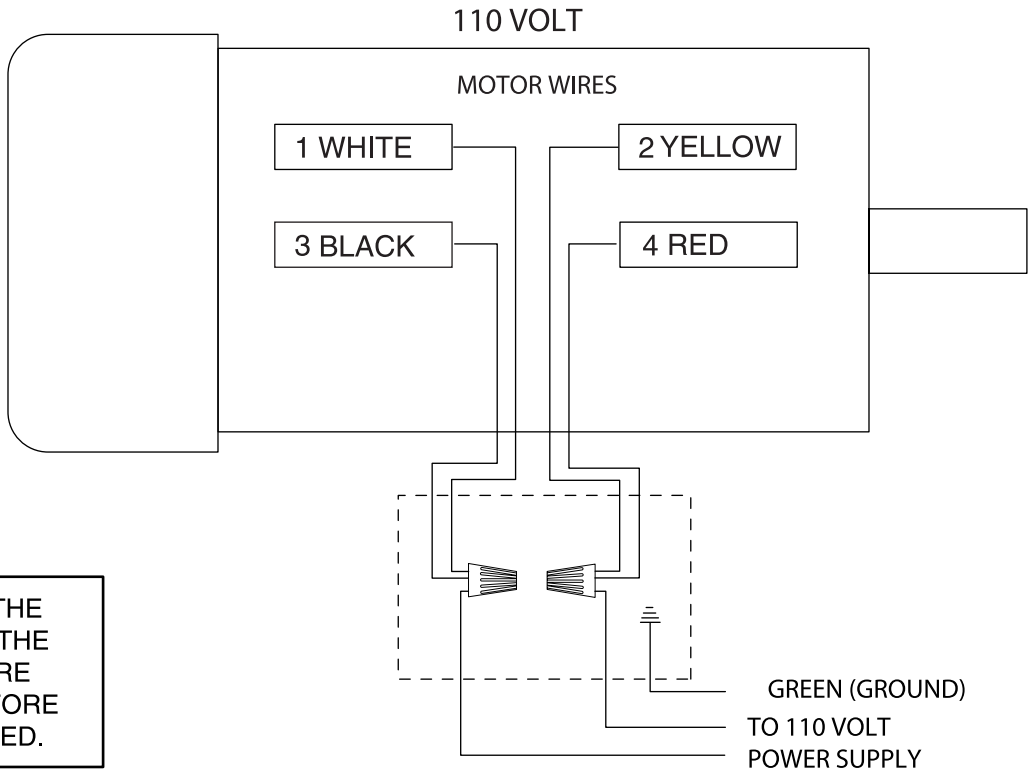

NOTE: THE WIRES FROM THE POWER SUPPLY, BESIDES THE GREEN GROUND WIRE, ARE INTERCHANGABLE, THEREFORE COLORS ARE NOT SPECIFIED.

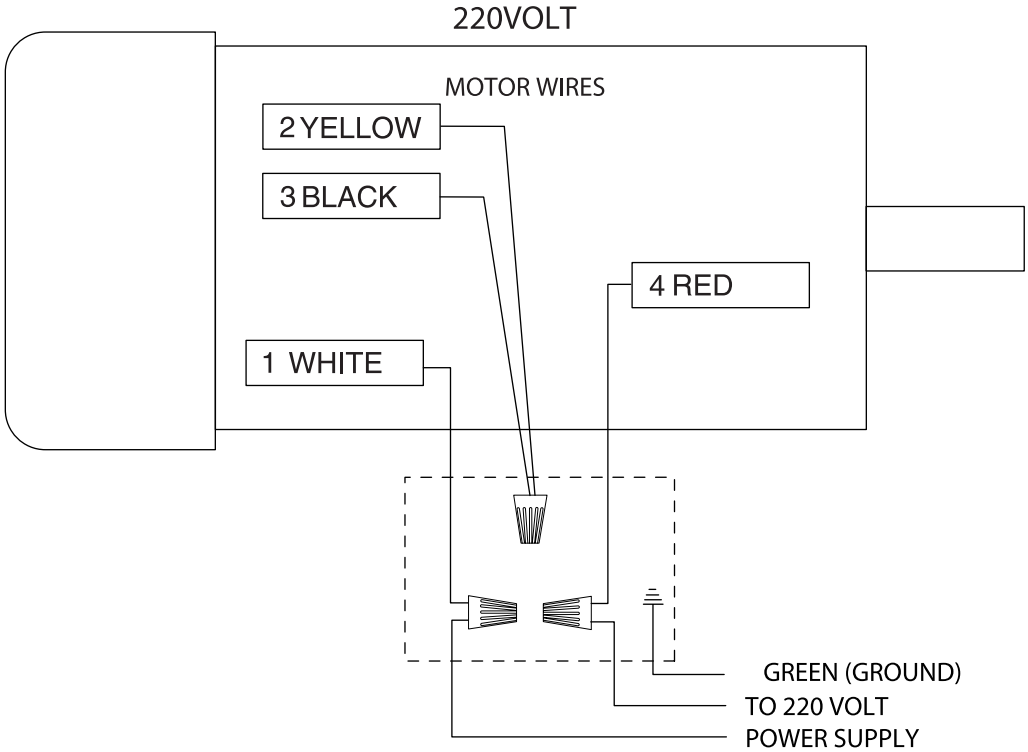

6-5A

NOTE: Green wire from the cord is grounded to the motor casing.
To reverse rotation, switch the positions of motor wires #5 and #8.

MACHINE DATA SHEET

Grizzly Industrial, Inc.®

Customer Service #: (570) 546-9663 • To Order Call: (800) 523-4777 • Fax #: (800) 438-5901

GRIZZLY MODEL G1022SM 10" TABLE SAW

Design Type .....Floor Model

Overall Dimensions:

Table Height .....37"
Table Size .....27⅛" D x 20⅛" W
Size With Extension Wings .....27⅛" D x 40⅝" W
With Wings and Fence Rails .....48" W x 44" D
Miter Gauge T-Slot .....⅜" x ¾"
Weight (Net) .....240 lbs.
Weight (Shipping) .....250 lbs.
Box # 1 Size .....37½" L x 23" W x 18½" H
Box # 2 Size .....46" L x 3" W x 1½" H
Footprint .....21" x 25"

Construction:

Table .....Ground Cast Iron
Stand .....Pre-formed Steel
Miter Gauge .....Aluminum / Steel
Trunnions .....Cast Iron
Bearings .....Shielded and Lubricated Ball Bearings
Fence ..... Single Lever, Front & Rear Locking w/ Micro Adjust Knob
Rails .....44" x 1⅜" Chrome Plated Tubing
Guard .....Steel and Clear Plastic
Wings .....Formed Sheet Steel

Cutting Capacity:

Maximum Blade Diameter .....10"
Maximum Depth of Cut at 90° .....3⅛"
Blade Tilt .....0°-45° Right
Maximum Depth of Cut at 45° .....2⅛"
Maximum Rip to Right of Blade (Standard) .....24"
Maximum Rip to Right of Blade (Optional Extension Rails) .....48"
Maximum Rip to Left of Blade .....11"
Distance from Front of Table to Center of Blade .....17"
Distance from Front of Table to Front of Blade .....12"
Maximum Width of Dado Cut .....13/16"

Motor:

Type .....TEFC Capacitor Start Induction
Horsepower ..... 1½ HP
Phase / Cycle .....Single Phase / 60 HZ
Voltage .....110 / 220V
Prewired 110V
Amps .....16 / 8A
Hertz and RPM .....60Hz / 3450 RPM
Power Transfer .....Belt Drive
Switch .....ON/OFF Push Button

Arbor:

Dimensions .....⅝" x 1¼"
Speed .....4,700 RPM

Features:

.....Includes Table Inserts for Standard Blade and Dado Blade

Specifications, while deemed accurate, are not guaranteed.

G1022SM

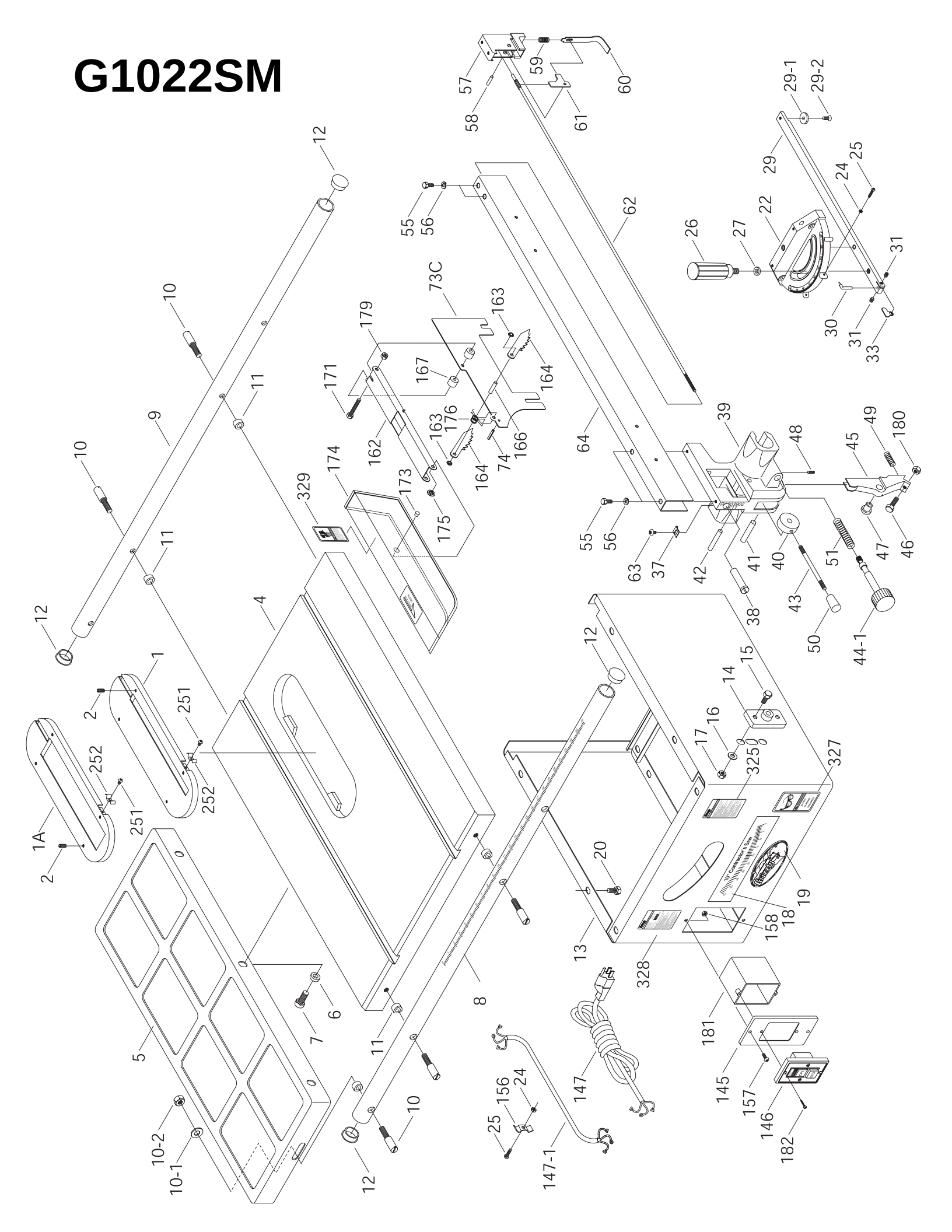

1
1A
2
4
5
6
7
8
9
10
10-1
10-2
11
12
13
14
15
16
17
18
19
20
22
24
25
26
27
29
29-1
29-2
30
31
33
37
38
39
40
41
42
43
44-1
45
46
47
48
49
50
51
55
56
57
58
59
60
61
62
63
64
73C
74
145
146
147
147-1
156
157
158
162
163
164
166
167
171
173
174
175
176
179
180
181
182
251
252
325
327
328
329

G1022SM

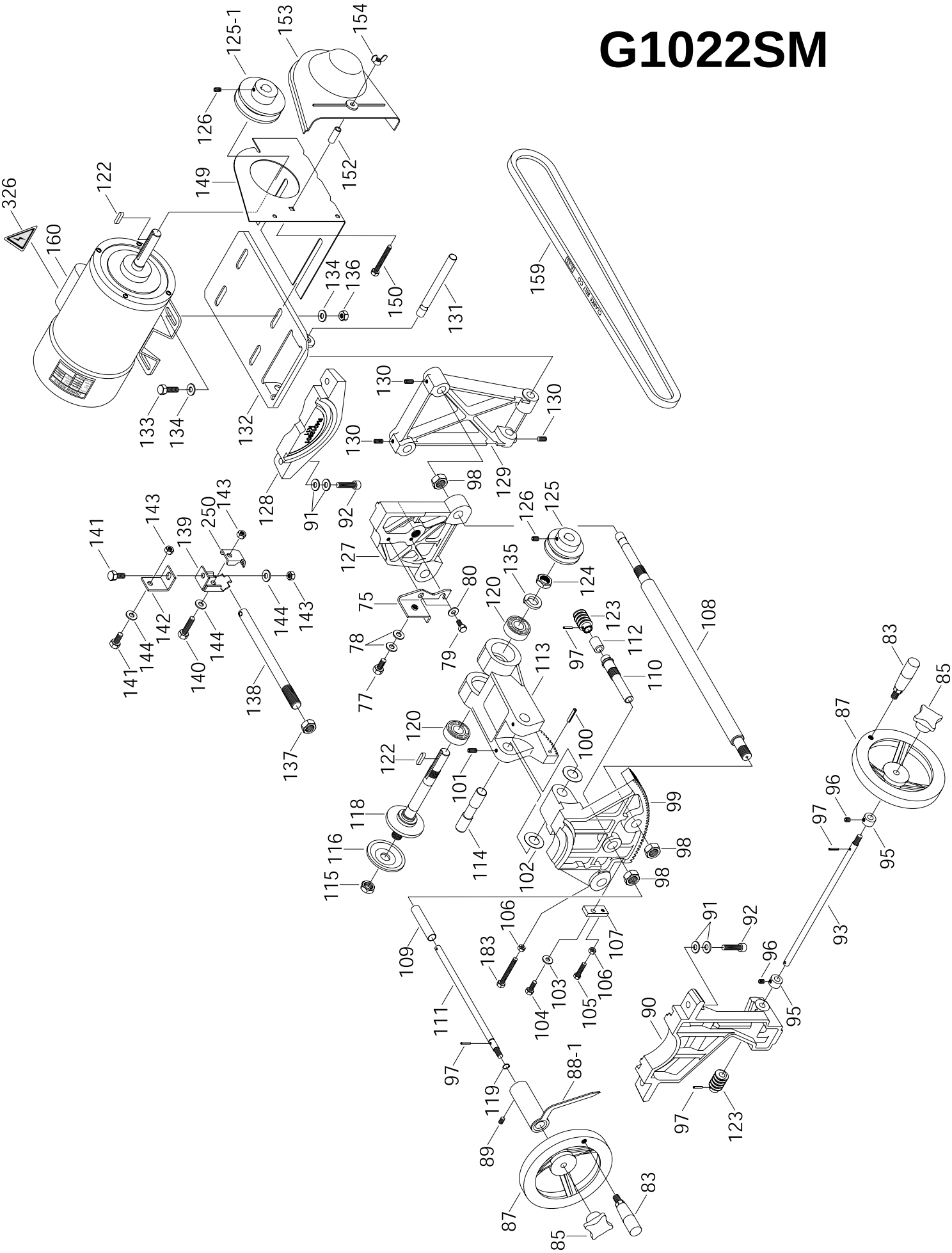

326
160
122
149
126
125-1
153
154
152
134
136
150
131
159
133
134
132
130
130
130
129
128
91
92
98
141
143
139
250
143
127
126
125
135
124
75
80
120
123
112
108
78
79
97
110
141
144
142
144
140
144
143
138
77
113
137
120
122
100
101
118
116
115
114
102
99
98
98
83
85
87
96
97
95
93
91
92
96
95
90
97
123
106
183
107
109
103
106
104
105
111
97
119
88-1
89
87
83
85

G1022SM

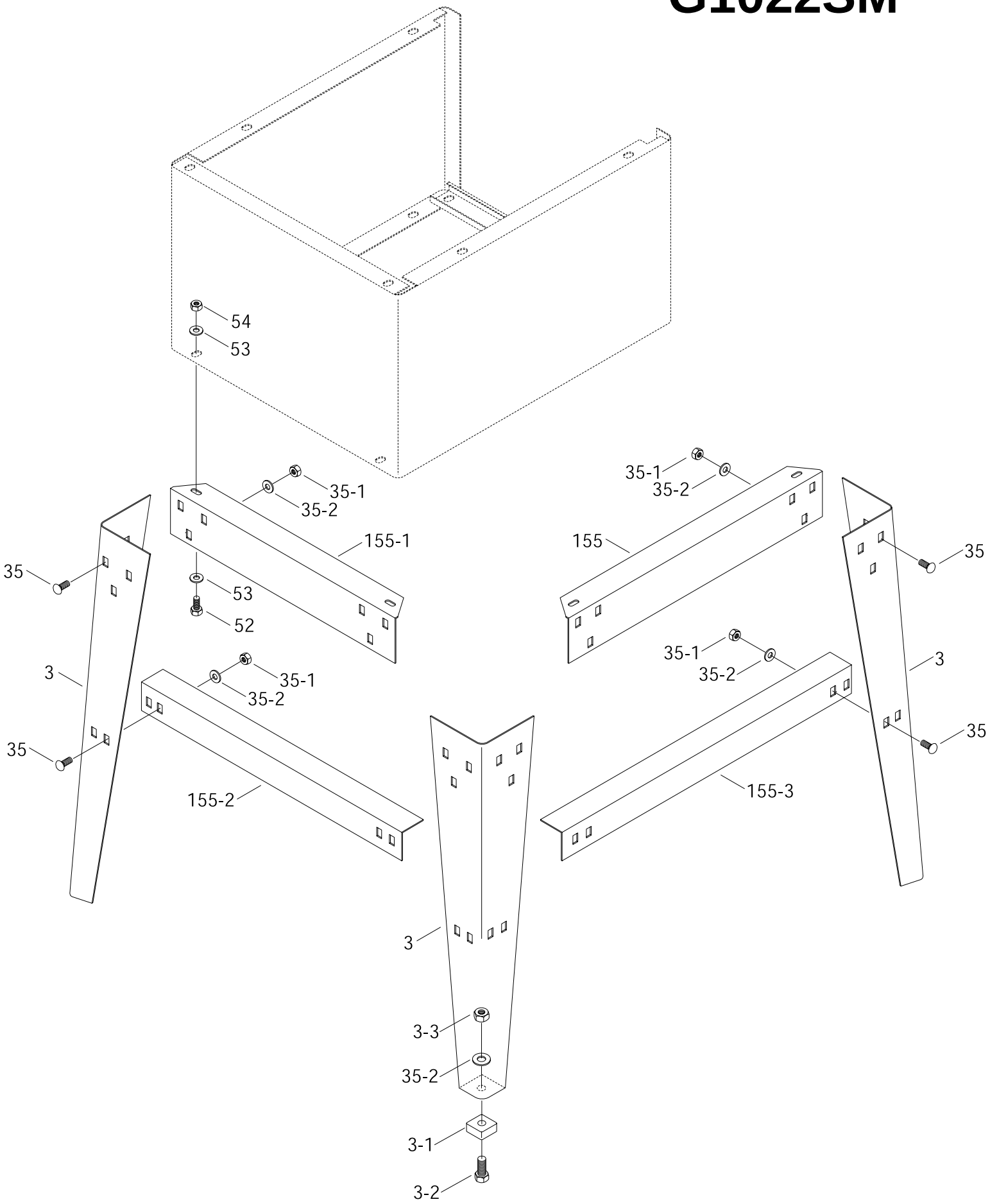
54
53
35-1
35-2
155-1
53
52
35
3
35
35-1
35-2
155-2
35-1
35-2
155
35
3
35
35-1
35-2
155-3
3
3-3
35-2
3-1
3-2

G1022SM PARTS LIST

REF	PART #	DESCRIPTION
1	P1022001	TABLE INSERT
1A	P1022001-A	DADO INSERT
2	PSS04M	SETSCREW M6-1.0 x 12
3	P1022Z003A	STAND LEG
3-1	P1022003-1	FOOT
3-2	PB32M	HEX BOLT M10-1.5 x 25
3-3	PN02M	HEX NUT M10-1.5
4	P1022004	TABLE
5	P1022SM005	SHEET METAL WING
6	PW04M	FLAT WASHER 10MM
7	PB01M	HEX BOLT M10-1.5 x 30
8	P1022008	FRONT GUIDE RAIL
9	P1022009	REAR GUIDE RAIL
10	P1022010	SPECIAL RAIL BOLT
10-1	PW04M	FLAT WASHER 10MM
10-2	PN02M	HEX NUT M10-1.5
11	P1022011	RAIL SPACER
12	P1022012	GUIDE RAIL PLUG
13	P1022013	CABINET
14	P1022014	GEAR BRACKET
15	PB03M	HEX BOLT M8-1.25 x 16
16	PW01M	FLAT WASHER 8MM
17	PN03M	HEX NUT M8-1.25
18	P1022018	TILTING SCALE
19	P1022SM019	LOGO PLATE
20	PB03M	HEX BOLT M8-1.25 x 16
21	PW01M	FLAT WASHER 8MM
22	P1022022	MITER BODY
24	PN04M	HEX NUT M4-0.7
25	PS01M	PHLP HD SCR M4-0.7 x 18
26	P1022026	HAND KNOB
27	P1022SM027	FIBER WASHER
29	P1022029	MITER BAR
29-1	P1022029-1	T-SLOT WASHER
29-2	PFH04M	FLAT HD SCR M6-1.0 x 8
30	P1022030	ANGLE POINTER
31	PSS02M	SETSCREW M6-1.0 x 6
33	P1022033	STOP LINK
35	PCB01M	CARR BOLT M8-1.25x20
35-1	PN03M	HEX NUT M8-1.25
35-2	PW01M	FLAT WASHER 8MM
37	P1022037	WIDTH POINTER
38	P1022038	FENCE ADJUSTER
39	P1022Z039	FRONT CLAMP

REF	PART #	DESCRIPTION
40	P1022040	ECCENTRIC
41	P1022041	SHAFT FOR ECCENTRIC
42	P1022042	SHAFT FOR CLAMP
43	P1022043	LOCK LEVER
44-1	P1022044-1	PINION W/ KNOB
45	P1022045	CLAMP SHOE
46	P1022046	ADJUSTING BOLT
47	P1022047	SHAFT BUSHING
48	PSS02M	SET SCREW M6-1.0 x 6
49	P1022049	SPRING
50	P1022050	HAND KNOB
51	P1022051	SPRING
52	PB03M	HEX BOLT M8-1.25 x 16
53	PW01M	FLAT WASHER 8MM
54	PN03M	HEX NUT M8-1.25
55	PB06M	HEX BOLT M8-1.25 x 12
56	PW01M	FLAT WASHER 8MM
57	P1022057	BLOCK
58	P1022058	PIN
59	P1022059	SPRING
60	P1022060	CLAMP HOOK
61	P1022061	LEVER
62	P1022062	LOCK LINK
63	PS05M	PHLP HD SCR M5-0.8 x 8
64	P1022064	FENCE
73C	P1022073C	SPLITTER
74	PRP20M	ROLL PIN 4 x 22
75	P1022075	BRACKET
77	PB03M	HEX BOLT M8-1.25 x 16
78	PW01M	FLAT WASHER 8MM
79	PB02M	HEX BOLT M6-1.0 x 12
80	PW03M	FLAT WASHER 6MM
83	P1022083	HANDLE
85	P1022085	KNOB
87	P1022087	HANDWHEEL
88-1	P1022088-1	POINTER ASSEMBLY
89	PSS03M	SETSCREW M6-1.0 x 8
90	P1022090	FRONT BRACKET
91	PW01M	FLAT WASHER 8MM
92	PSB13M	CAP SCREW M8-1.25x30
93	P1022093	ANGLE WORM SHAFT
95	P1022095	COLLAR
96	PSS02M	SETSCREW M6-1.0 x 6

G1022SM PARTS LIST

REF	PART #	DESCRIPTION
97	PRP02M	ROLL PIN 3 x 16
98	PN05M	HEX NUT M16-1.5
99	P1022090	FRONT TRUNNION
100	PRP06M	ROLL PIN 5 X 24
101	PSS04M	SET SCR M6 - 1.0 x 12
102	P1022102	WAVY WASHER
103	PW03M	FLAT WASHER 6MM
104	PB08M	HEX BOLT M6-1.0 x 20
105	PB10M	HEX BOLT M6-1.0 x 25
106	PN01M	HEX NUT M6-1.0
107	P1022107	SET PLATE
108	P1022108	LINKING BAR
109	P1022109	SPACER
110	P1022110	ECCENTRIC SLEEVE
111	P1022111	WORM SHAFT
112	P1022112	SPACER
113	P1022113	ARBOR BRACKET
114	P1022114	ARBOR BRACKET PIN
115	P1022115	ARBOR NUT
116	P1022116	FLANGE
118	P1022118	BLADE ARBOR
120	P6203	BEARING 6203-2RS
122	PK01M	KEY 5 x 5 x 22MM
123	P1022123	WORM
124	P1022124	HEX NUT M17
125	P1022125	SPINDLE PULLEY
125-1	P1022125-1	MOTOR PULLEY
126	PSS03M	SETSCREW M6-1.0 x 12
127	P1022127	REAR TRUNNION
128	P1022128	REAR BRACKET
129	P1022129	MOTOR BRACKET
130	PSS04M	SETSCREW M6-1.0 x 12
131	P1022131	MOTOR PLATE ROD
132	P1022132	MOTOR PLATE
133	PB07M	HEX BOLT M8-1.25 x 25
134	PW01M	FLAT WASHER 8MM
135	PLW06	LOCK WASHER ⅝"
136	PN03M	HEX NUT M8-1.25
137	PN05M	HEX NUT M16-1.5
138	P1022138	SHAFT
139	P1022139	BRACKET
140	PB26M	HEX BOLT M8-1.25 x 30

REF	PART #	DESCRIPTION
141	PB03M	HEX BOLT M8-1.25 x 16
142	P1022142	CONNECTING PLATE
143	PN03M	HEX NUT M8-1.25
144	PW01M	FLAT WASHER 8MM
145	P1022145A	SWITCH BRACKET
146	P1022146	SWITCH
147	PWRCRD110S	POWER CORD
147-1	PWRCRD110L	MOTOR CORD
148	P1022148	SPANNER WRENCH
149	P1022149	PULLEY GUARD BRACKET
150	PB10	HEX BOLT ¼"-20 x 2"
152	P1022152	SLEEVE
153	P1022153	PULLEY COVER
154	PWN02	WING NUT ¼"-20
155	P1022Z155	UPPER BRACKET - LONG
155-1	P1022Z155-1	UPPER BRACKET - SHORT
155-2	P1022Z155-2	LOWER BRACKET - SHORT
155-3	P1022Z155-3	LOWER BRACKET - LONG
156	P1022156	WIRE CLAMP
157	PS08M	PHLP HD SCR M5-0.8 x 12
158	PN06M	HEX NUT M5-0.8
159	PVA43	V-BELT A-43
160	G2535	MOTOR 1½ HP
161	P1022161	STRAIN RELIEF (Not Shown)
162	P1022162	SUPPORTING ARM
163	P1022163	RETAINER
164	P1022164	PAWL
166	P1022Z166	PIN
167	P1022167	SPACER
171	PB47M	HEX BOLT M6-1.0 x 40
173	P1022Z173	PIVOT PIN
174	P1022Z174	GUARD
175	P1022Z175	RETAINER
176	P1022068	SPRING
179	PLN03M	LOCK NUT M6-1.0
180	PN02M	HEX NUT M10-1.5
181	P1022181	SWITCH GUARD
182	PS02M	PHLP HD SCR M4-0.7 X 12
183	PB39M	HEX BOLT M6-1.0 x 50
250	P1022Z250	CLAMP
251	PS05M	PHLP HD SCR M5-0.8 X 8
252	P1022Z252	SPRING
325	P1022SM325	WARNING LABEL
326	P1022SM326	ELECTRICITY LABEL
327	P1022SM327	SAFETY GLASSES LABEL
328	P1022SM328	MACHINE ID LABEL
329	P1022SM329	BLADE GUARD LABEL

MACHINE DATA SHEET

Grizzly Industrial, Inc.®

Customer Service #: (570) 546-9663 • To Order Call: (800) 523-4777 • Fax #: (800) 438-5901

GRIZZLY MODEL G1022Z TABLE SAW

Design Type .....Floor Model

Overall Dimensions:

Table Height .....37"
Table Size .....27⅛" D x 20⅛" W
Table Size With Extension Wings .....27⅛" D x 40⅝" W
Table With Wings and Fence Rails .....48" W x 44" D
Miter Gauge T-Slot .....⅜" x ¾"
Weight (Net) .....240 lbs.
Weight (Shipping) .....250 lbs.
Box # 1 Size .....36" L x 18½" W x 25" H
Box # 2 Size .....46" L x 3" W x 2" H
Box # 3 Size .....12" L x 12" W x 5" H
Footprint .....21" x 25"

Construction:

Table .....Ground Cast Iron
Stand .....Pre-formed Steel
Miter Gauge .....Aluminum / Steel
Trunnions .....Cast Iron
Bearings .....Shielded and Lubricated Ball Bearings
Fence .....Single Lever; Front & Rear Locking w/ Micro Adjust Knob; .....Heavy Extruded Aluminum with Tee Slot Top
Rails .....44" x 1⅜" Chrome Plated Tubing
Guard .....Steel and Clear Plastic
Wings .....Ground Cast Iron, Open Ribbed Design

Cutting Capacity:

Maximum Blade Diameter .....10"
Maximum Depth of Cut at 90° .....3⅛"
Blade Tilt .....0°-45° Right
Maximum Depth of Cut at 45° .....2⅛"
Maximum Rip to Right of Blade (Standard) .....24"
Maximum Rip to Right of Blade (Optional Extension Rails) .....48"
Maximum Rip to Left of Blade .....11"
Distance from Front of Table to Center of Blade .....17"
Distance from Front of Table to Front of Blade .....12"
Maximum Width of Dado Cut .....13/16"

Motor:

Type .....TEFC Capacitor Start Induction
Horsepower .....1½ HP
Phase / Cycle .....Single Phase / 60 HZ
Voltage .....110 / 220V
Prewired 110V
Amps .....16 / 8A
Hertz and RPM .....60Hz / 3450 RPM
Power Transfer .....Belt Drive
Switch .....ON/OFF Push Button

Arbor:

Dimension .....⅝" x 1¼"
Speed .....4,700 RPM

Features:

.....Includes Table Inserts for Standard Blade and Dado Blade

Specifications, while deemed accurate, are not guaranteed.

G1022Z

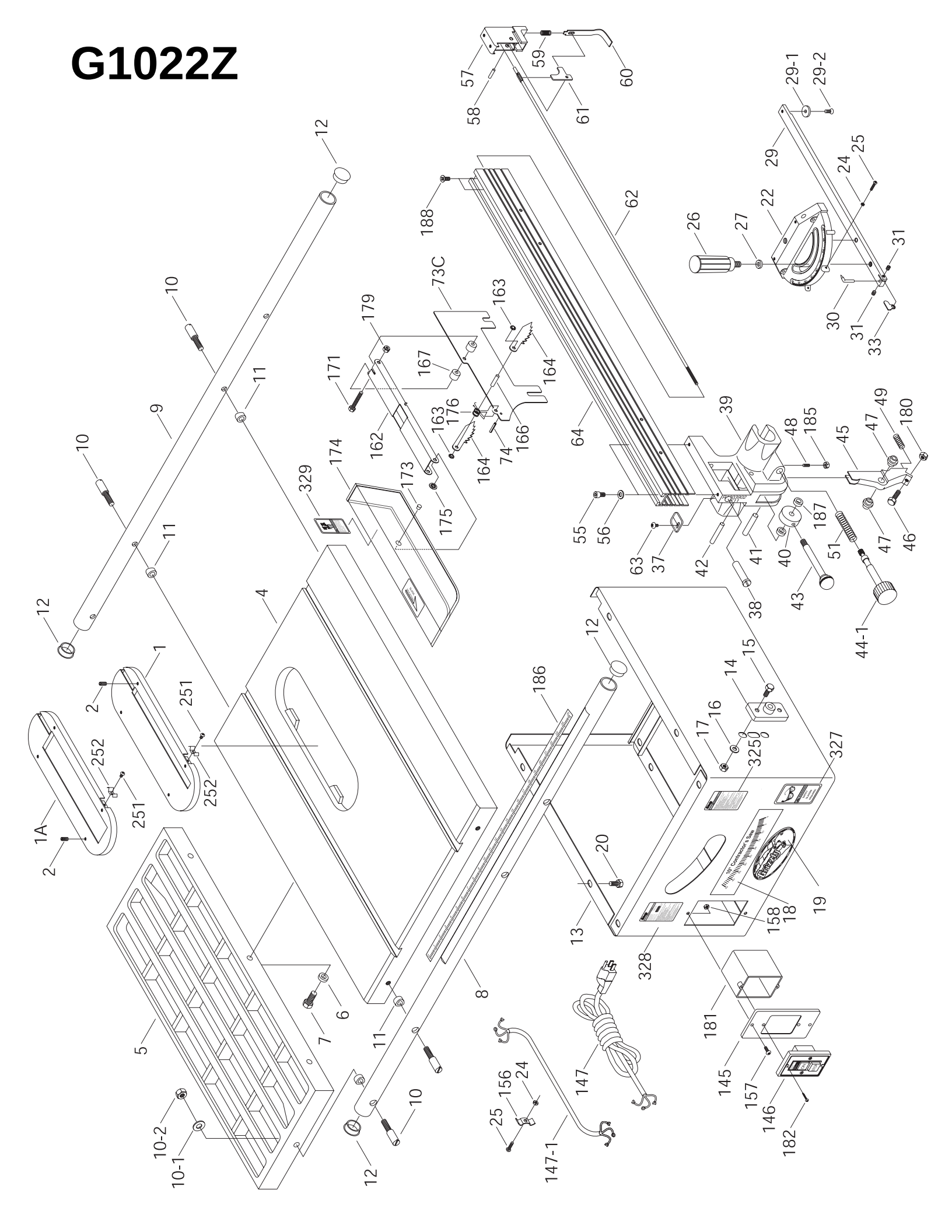

57
58
59
60
61
29-1
29-2
29
25
24
22
26
27
31
30
31
33
188
62
73C
163
179
167
164
171
176
163
166
74
164
162
174
173
175
329
64
39
48
185
45
47
49
180
55
56
63
37
42
41
40
187
51
47
46
43
38
44-1
12
10
11
9
10
11
12
4
1
2
251
252
252
251
1A
2
12
186
15
14
16
17
325
327
20
13
19
18
158
328
181
145
157
146
182
147
147-1
25
156
24
10
12
5
6
7
11
10-2
10-1

G1022Z

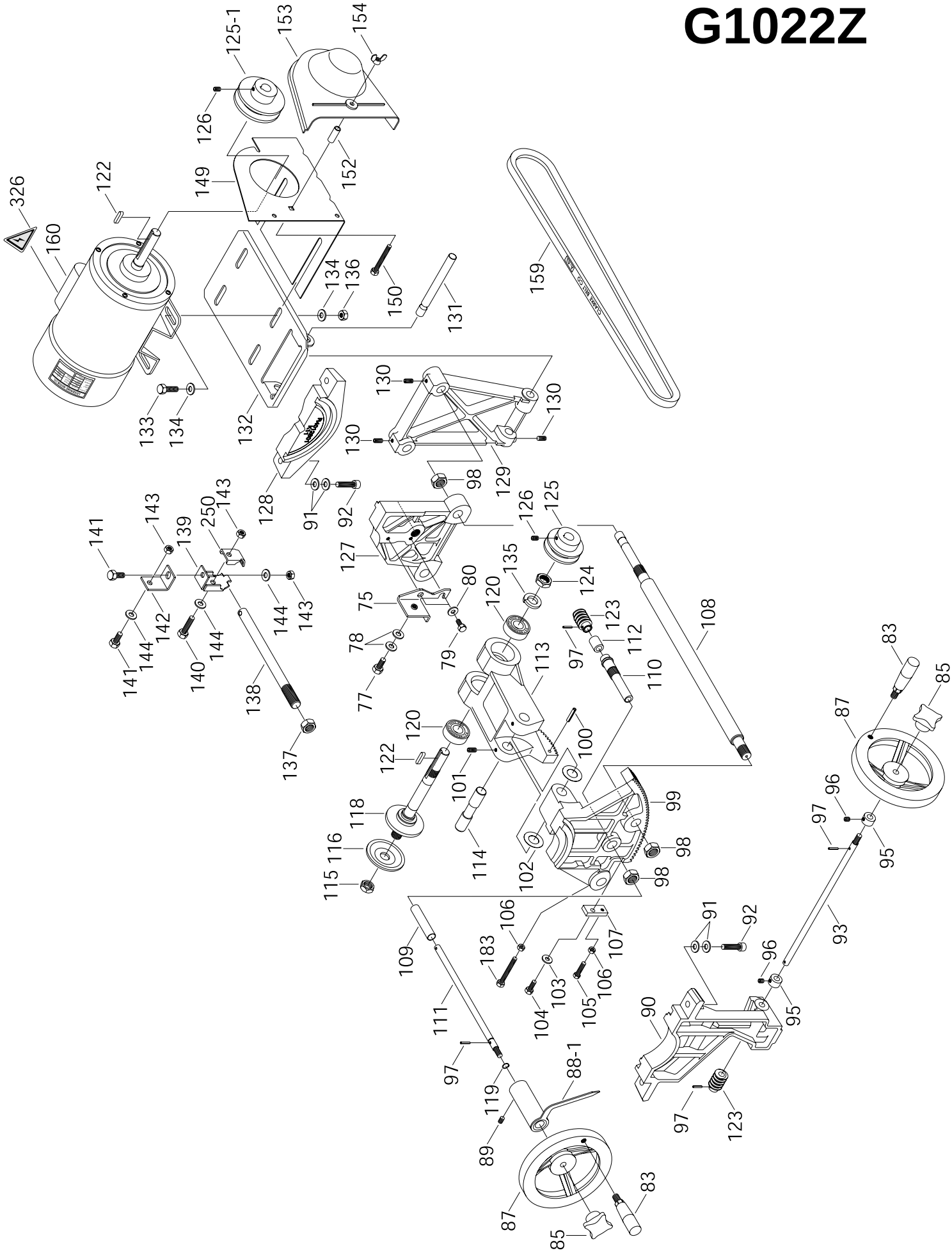

326
160
122
125-1
153
154
126
149
152
134
136
150
131
159
133
134
132
130
130
130
129
128
91
92
98
126
125
127
135
124
120
75
80
78
79
77
123
112
97
110
108
113
120
122
100
101
118
116
115
114
102
99
98
98
83
85
87
96
97
95
93
91
92
96
95
90
97
123
109
106
183
107
103
104
105
106
111
97
119
88-1
89
87
83
85
141
143
139
250
143
142
144
144
144
143
141
140
138
137

G1022Z

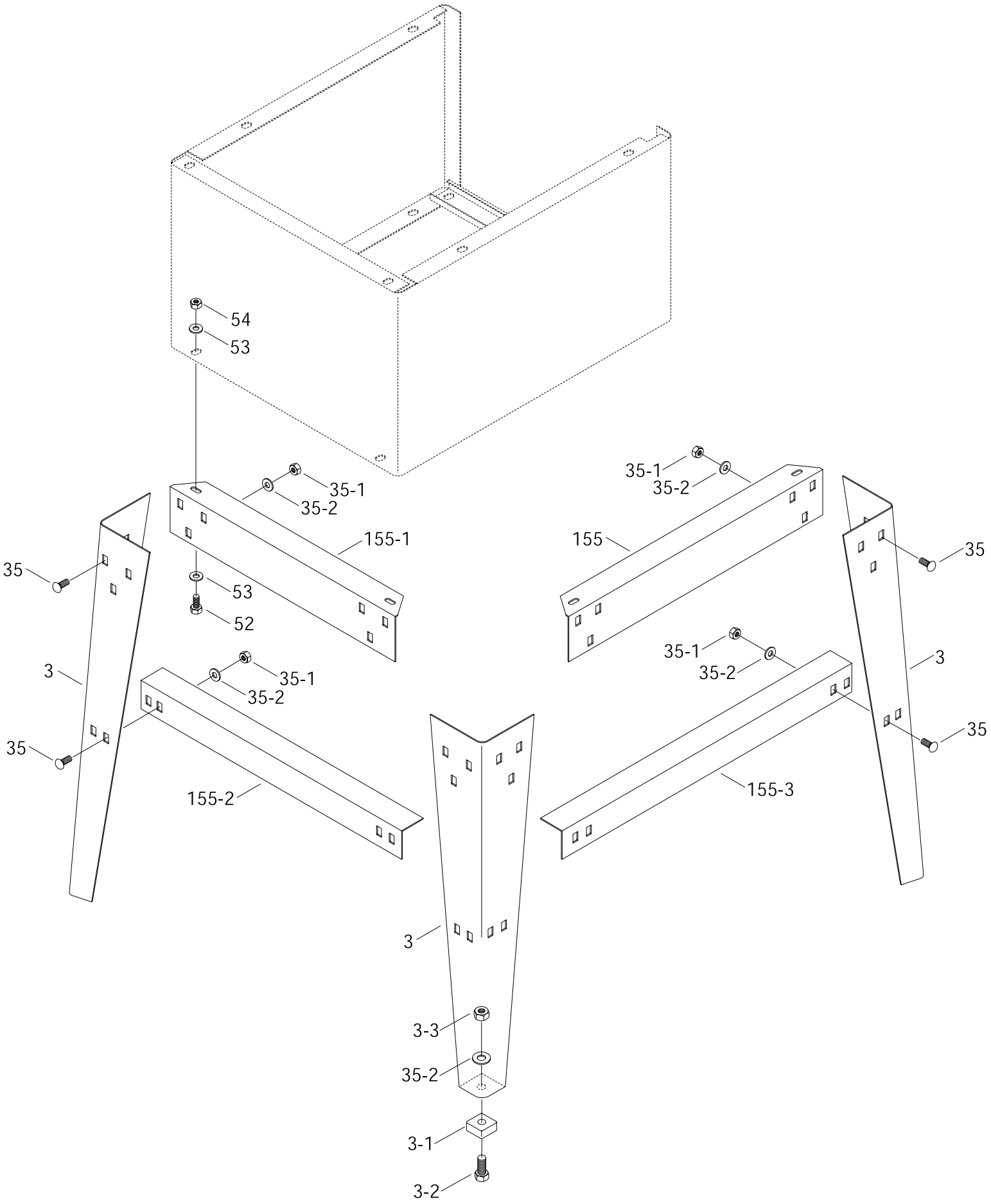
54
53
35-1
35-2
155-1
53
52
35-1
35-2
155
35
35
3
35-1
35-2
35
35-1
35-2
3
155-2
155-3
3
3-3
35-2
3-1
3-2

G1022Z PARTS LIST

REF	PART #	DESCRIPTION
1	P1022001	TABLE INSERT
1A	P1022001-A	DADO INSERT
2	PSS04M	SETSCREW M6-1.0 x 12
3A	P1022Z003A	STAND LEG
3-1	P1022003-1	FOOT
3-2	PB32M	HEX BOLT M10-1.5 x 25
3-3	PN02M	HEX NUT M10-1.5
4	P1022004	TABLE
5	G1193	EXTENSION WING
6	PW04M	FLAT WASHER 10MM
7	PB01M	HEX BOLT M10-1.5 x 30
8	P1022Z008	FRONT GUIDE RAIL
9	P1022009	REAR GUIDE RAIL
10	P1022010	SPECIAL RAIL BOLT
10-1	PW04M	FLAT WASHER 10MM
10-2	PN02M	HEX NUT M10-1.5
11	P1022011	RAIL SPACER
12	P1022012	GUIDE RAIL PLUG
13	P1022013	CABINET
14	P1022014	GEAR BRACKET
15	PB03M	HEX BOLT M8-1.25 x 16
16	PW01M	FLAT WASHER 8MM
17	PN03M	HEX NUT M8-1.25
18	P1022018	TILTING SCALE
19	P1022SM019	LOGO PLATE
20	PB03M	HEX BOLT M8-1.25 x 16
21	PW01M	FLAT WASHER 8MM
22	P1022Z022	MITER BODY
24	PN04M	HEX NUT M4-0.7
25	PS01M	PHLP HD SCR M4 - 0.7 x 18
26	P1022026	HAND KNOB
27	P1022SM027	FIBER WASHER
29	P1022029	MITER BAR
29-1	P1022029-1	T-SLOT WASHER
29-2	PFH04M	FLAT HD SCR M6-1.0 x 8
30	P1022030	ANGLE POINTER
31	PSS02M	SETSCREW M6-1.0 x 6
33	P1022033	STOP LINK
35	PCB01M	CARR. BOLT M8-1.25 x 20
35-1	PN03M	HEX NUT M8-1.25
35-2	PW01M	FLAT WASHER 8MM
37	P1022Z037	WIDTH POINTER
38	P1022038	FENCE ADJUSTER
39	P1022Z039	FRONT CLAMP
40	P1022040	ECCENTRIC

REF	PART #	DESCRIPTION
41	P1022041	SHAFT FOR ECCENTRIC
42	P1022042	SHAFT FOR CLAMP
43	P1022Z043	LOCK LEVER
44-1	P1022044-1	PINION W/ KNOB
45	P1022045	CLAMP SHOE
46	P1022046	ADJUSTING BOLT
47	P1022047	SHAFT BUSHING
48	PSS02M	SET SCR M6-1.0 x 6
49	P1022049	SPRING
51	P1022051	SPRING
52	PB03M	HEX BOLT M8-1.25 x 16
53	PW01M	FLAT WASHER 8MM
54	PN03M	HEX NUT M8-1.25
55	PSB52M	CAP SCR M8-1.25 x 10
56	PW01M	FLAT WASHER 8MM
57	P1022057	BLOCK
58	P1022058	PIN
59	P1022059	SPRING
60	P1022060	CLAMP HOOK
61	P1022061	LEVER
62	P1022062	LOCK LINK
63	PS05M	PHLP HD SCR M5-0.8 x 8
64	P1022Z064	FENCE
73C	P1022073C	SPLITTER
74	PRP20M	ROLL PIN 4 x 22
75	P1022075	BRACKET
77	PB03M	HEX BOLT M8-1.25 x 16
78	PW01M	FLAT WASHER 8MM
79	PB02M	HEX BOLT M6-1.0 x 12
80	PW03M	FLAT WASHER 6MM
83	P1022083	HANDLE
85	P1022085	KNOB
87	P1022087	HANDWHEEL
88-1	P1022088-1	POINTER ASSEMBLY
89	PSS03M	SETSCREW M6-1.0 x 8
90	P1022090	FRONT BRACKET
91	PW01M	FLAT WASHER 8MM
92	PSB13M	CAP SCR M8-1.25 x 30
93	P1022093	ANGLE WORM SHAFT
95	P1022095	COLLAR
96	PSS02M	SETSCREW M6-1.0 x 6
97	PRP02M	ROLL PIN 3 x 16
98	PN05M	HEX NUT M16-1.5
99	P1022099	FRONT TRUNNION

G1022Z PARTS LIST

REF	PART #	DESCRIPTION
100	PRP06M	ROLL PIN 5 X 24
101	PSS04M	SET SCR M6 - 1.0 x 12
102	P1022102	WAVY WASHER
103	PW03M	FLAT WASHER 6MM
104	PB08M	HEX BOLT M6-1.0 x 20
105	PB10M	HEX BOLT M6-1.0 x 25
106	PN01M	HEX NUT M6-1.0
107	P1022107	SET PLATE
108	P1022108	LINKING BAR
109	P1022109	SPACER
110	P1022110	ECCENTRIC SLEEVE
111	P1022111	WORM SHAFT
112	P1022112	SPACER
113	P1022113	ARBOR BRACKET
114	P1022114	ARBOR BRACKET PIN
115	P1022115	ARBOR NUT
116	P1022116	FLANGE
118	P1022118	BLADE ARBOR
120	P6203	BEARING 6203-2RS
122	PK01M	KEY 5 x 5 x 22M
123	P1022123	WORM
124	P1022124	HEX NUT M17
125	P1022125	SPINDLE PULLEY
125-1	P1022125-1	MOTOR PULLEY
126	PSS03M	SETSCREW M6-1.0 x 12
127	P1022127	REAR TRUNNION
128	P1022128	REAR BRACKET
129	P1022129	MOTOR BRACKET
130	PSS04M	SETSCREW M6-1.0 x 12
131	P1022131	MOTOR PLATE ROD
132	P1022132	MOTOR PLATE
133	PB07M	HEX BOLT M8-1.25 x 25
134	PW01M	FLAT WASHER 8MM
135	PLW06	LOCK WASHER ⅝"
136	PN03M	HEX NUT M8-1.25
137	PN05M	HEX NUT M16-1.5
138	P1022138	SHAFT
139	P1022139	BRACKET
140	PB26M	HEX BOLT M8-1.25 x 30
141	PB03M	HEX BOLT M8-1.25 x 16
142	P1022142	CONNECTING PLATE
143	PN03M	HEX NUT M8-1.25
144	PW01M	FLAT WASHER 8MM

REF	PART #	DESCRIPTION
145	P1022145A	SWITCH BRACKET
146	P1022146	SWITCH
147	PWRCRD110S	POWER CORD
147-1	PWRCRD110L	MOTOR CORD
148	P1022148	SPANNER WRENCH
149	P1022149	PULLEY GUARD BRACKET
150	PB10	HEX BOLT ¼"-20 x 2"
152	P1022152	SLEEVE
153	P1022153	PULLEY COVER
154	PWN02	WING NUT ¼"-20
155	P1022Z155	UPPER BRACKET - LONG
155-1	P1022Z155-1	UPPER BRACKET - SHORT
155-2	P1022Z155-2	LOWER BRACKET - SHORT
155-3	P1022Z155-3	LOWER BRACKET - LONG
156	P1022156	WIRE CLAMP
157	PS08M	PHLP HD SCR M5-0.8 x 12
158	PN06M	HEX NUT M5-0.8
159	PVA43	V-BELT A-43
160	G2535	MOTOR 1½ HP
161	P1022Z161	STRAIN RELIEF (Not Shown)
162	P1022Z162	SUPPORTING ARM
163	P1022Z163	RETAINER
164	P1022069	PRAWL
166	P1022Z166	PIN
167	P1022164	SPACER
171	PB47M	HEX BOLT M6-1.0 x 40
173	P1022Z173	PIVOT PIN
174	P1022Z174	GUARD
175	P1022Z175	RETAINER
176	P1022068	SPRING
179	PLN03M	LOCK NUT M6-1.0
180	PN02M	HEX NUT M10-1.5
181	P1022Z181	SWITCH GUARD
182	PS02M	PHLP HD SCR M4-0.7 X 12
183	PB39M	HEX BOLT M6-1.0 x 50
185	PN01M	HEX NUT M6-1.0
186	G3121	SCALE
187	P1022Z187	SPACER
188	PFH08M	FLAT HD SCR M8-1.25 x 12
250	P1022Z250	CLAMP
251	PS05M	PHLP HD SCR M5-0.8 X 8
252	P1022Z252	SPRING W/ CLIP
325	P1022SM325	WARNING LABEL
326	P1022SM326	ELECTRICITY LABEL
327	P1022SM327	SAFETY GLASSES LABEL
328	P1022Z328	MACHINE ID LABEL
329	P1022SM329	BLADE GUARD LABEL

MACHINE DATA SHEET

Grizzly Industrial, Inc.®

Customer Service #: (570) 546-9663 • To Order Call: (800) 523-4777 • Fax #: (800) 438-5901

GRIZZLY MODELS G1022ZF, ZFX, PROZ, & PROZX

Design Type .....Floor Model

Overall Dimensions:

Table Height .....37"
Table Size .....27⅛" D x 20⅛" W
Table Size With Extension Wings .....27⅛" D x 40⅝" W
Overall Dimensions – With Wings and Fence Rails .....50" D x 52½" W
Miter Gauge T-Slot .....⅜" x ¾"
Blade Tilt .....0°-45° Right
Weight (Net) .....325 lbs.
Weight (Shipping) .....340 lbs.
Box # 1 Size (Base) .....37½" L x 22" W x 22½" H
Box # 2 Size (Fence) .....49" L x 15½" W x 9" H
Box # 3 Size (Accessories) .....14" L x 14" W x 6" H
Box # 4 Size (Motor) .....10¼" L x 16" W x 9¾" H
Footprint .....21" x 25"

Construction:

Table .....Ground Cast Iron
Stand .....Pre-formed Steel
Miter Gauge .....Cast Iron / Steel; Adjusts for Side Play
Trunnions .....Cast Iron
Bearings .....Shielded and Lubricated Ball Bearings
Fence .....SHOP FOX® Heavy-Duty (PROZ: SHOP FOX® Classic
Guard .....Steel and Clear Plastic
Wings .....Precision-Ground Cast Iron

Cutting Capacity:

Maximum Blade Diameter .....10"
Maximum Depth of Cut at 90° .....3⅛"
Maximum Depth of Cut at 45° .....2⅛"
Maximum Rip to Right of Blade (Standard) .....25"
Maximum Rip to Right of Blade (Optional Extension Rails) .....48"
Maximum Rip to Left of Blade .....11"
Distance from Front of Table to Center of Blade .....17¼"
Distance from Front of Table to Front of Blade .....12½"
Maximum Width of Dado Cut .....13/16"

Motor:	**ZF**	**ZFX**	**PROZ**	**PROZX**
Type	TEFC Capacitor Start Induction			
Horsepower	1½ HP	2 HP	2 HP	2 HP
Phase / Cycle	Single Phase / 60 HZ			
Voltage	110 / 220V			
Prewired	110V	220V	220V	220V
Amps	17 / 8.5A	26 / 13A	26 / 13A	26 / 13A
RPM	3450 RPM			
Power Transfer	Power Twist® Link Belt Drive			
Switch	ON/OFF Push Button			

Arbor:

Dimension .....⅝" x 1¼"
Speed .....4,700 RPM

Features:

.....Includes Table Inserts for Standard Blade and Dado Blade
.....U.S.A. Motor, 4" Ported Dust Hood, Link Belt, Rail Mounted Switch

Specifications, while deemed accurate, are not guaranteed.

G1022ZF, ZFX, PROZ, & PROZX

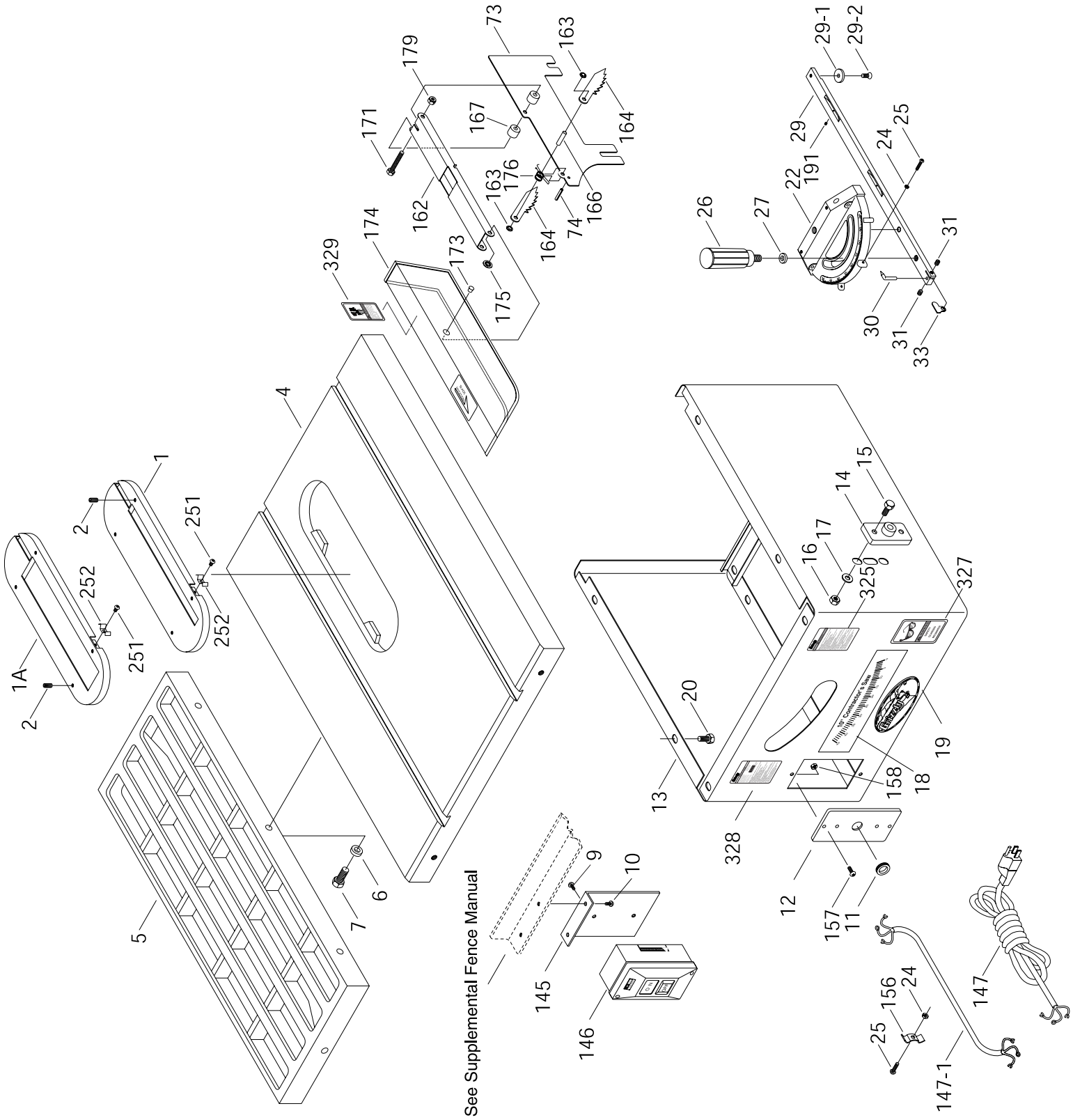

G1022ZF, ZFX, PROZ, & PROZX

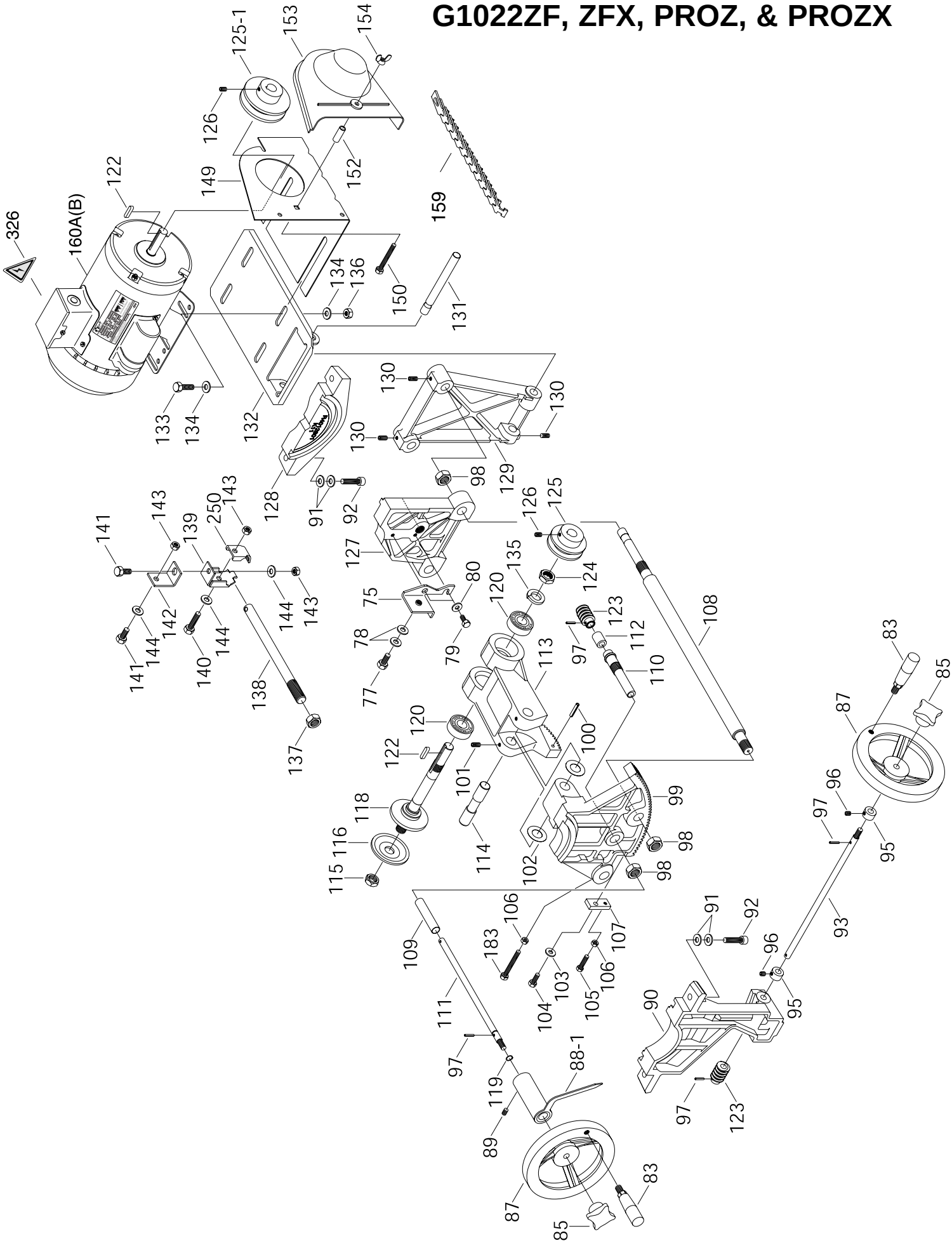

G1022ZF, ZFX, PROZ, & PROZX

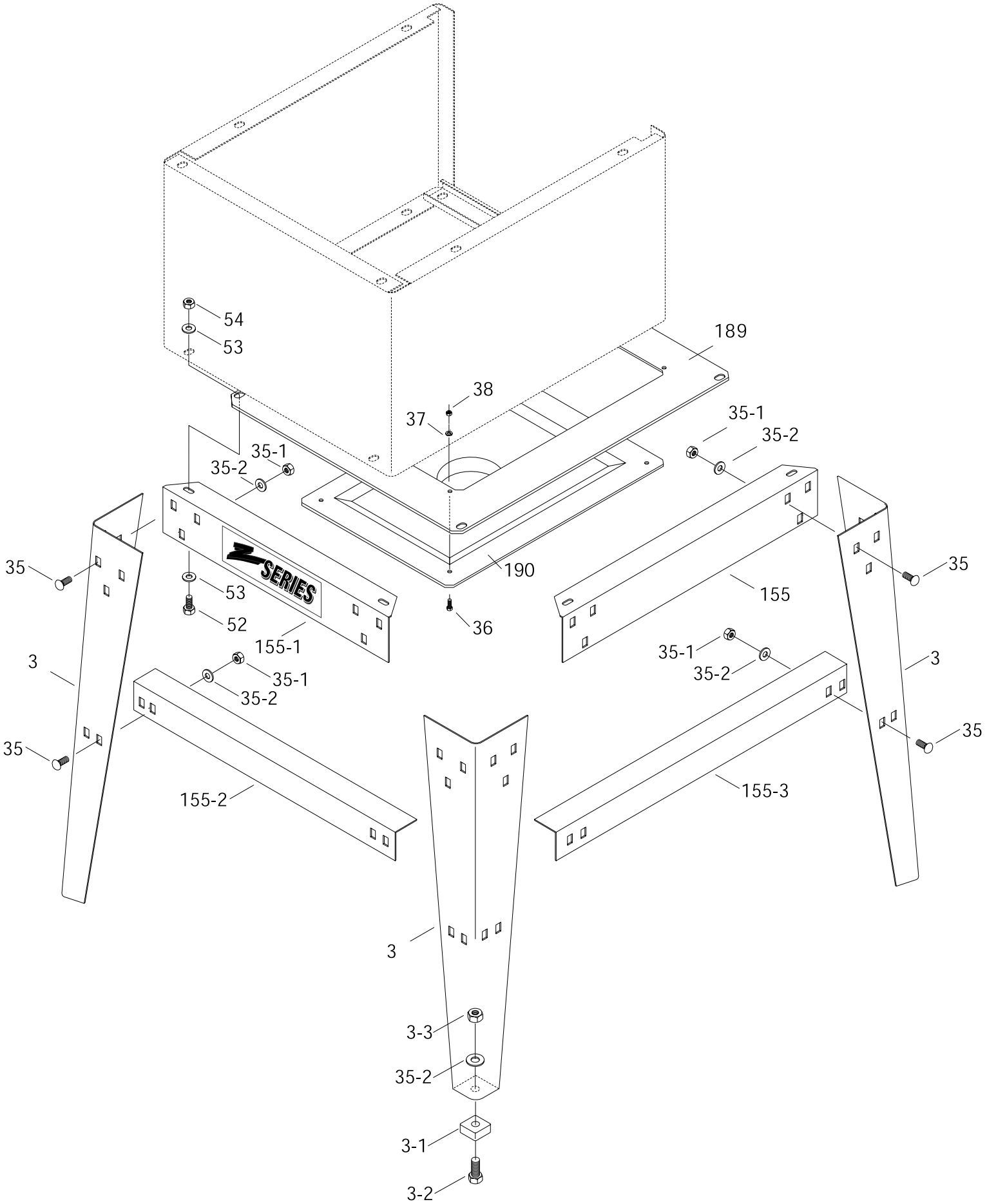

G1022ZF, ZFX, PROZ, & PROZX PARTS LIST

REF	PART #	DESCRIPTION
1	P1022ZF001	TABLE INSERT
1A	P1022001-A	DADO INSERT
2	PSS04M	SETSCREW M6-1.0 x 12
3A	P1022Z003A	STAND LEG
3-1	P1022003-1	FOOT
3-2	PB32M	HEX BOLT M10-1.5 x 25
3-3	PN02M	HEX NUT M10-1.5
4	P1022ZF004	TABLE
5*	G1193	EXTENSION WING (*G1022ZF/ZFX)
5*	P1022PROZ005	EXTENSION WING (*G1022PROZ)
5*	P1022PROZX005	EXTENSION WING (*G1022PROZX)
6	PW04M	FLAT WASHER 10MM
7	PB01M	HEX BOLT M10-1.5 x 30
9	P1022ZF009	SPECIAL SCR
10	P1022ZF010	SPECIAL SCR
11	P1022ZF011	RUBBER GROMMET
12	P1022ZF012	SWITCH CORD PLATE
13	P1022013	CABINET
14	P1022014	GEAR BRACKET
15	PB03M	HEX BOLT M8-1.25 x 16
16	PW01M	FLAT WASHER 8MM
17	PN03M	HEX NUT M8-1.25
18	P1022018	TILTING SCALE
19	P1022SM019	PLATE LOGO
20	PB03M	HEX BOLT M8-1.25 x 16
21	PW01M	FLAT WASHER 8MM
22	P1022022	MITER BODY
24	PN04M	HEX NUT M4-0.7
25	PS01M	PHLP HD SCR M4 - 0.7 x 18
26	P1022026	HAND KNOB
27	P1022SM027	FIBER WASHER
29	P1022ZF029	ADJUSTABLE MITER BAR
29-1	P1022029-1	T-SLOT WASHER
29-2	PFH04M	FLAT HD SCR M6-1.0 x 8
30	P1022030	ANGLE POINTER
31	PSS02M	SETSCREW M6-1.0 x 6
33	P1022033	STOP LINK
35	PCB01M	CARR. BOLT M8-1.25 x 20
35-1	PN03M	HEX NUT M8-1.25
35-2	PW01M	FLAT WASHER 8MM
36	PB68	HEX BOLT 10-24 X ⅜"
37	PW03	LOCK WASHER #10
38	PN25	HEX NUT 10-24
52	PB03M	HEX BOLT M8-1.25 x 16
53	PW01M	FLAT WASHER 8MM
54	PN03M	HEX NUT M8-1.25
73C	P1022073C	SPLITTER
74	PRP20M	ROLL PIN 4 x 22
75	P1022075	BRACKET

REF	PART #	DESCRIPTION
77	PB03M	HEX BOLT M8-1.25 x 1678
PW01M		FLAT WASHER 8MM
79	PB02M	HEX BOLT M6-1.0 x 12
80	PW03M	FLAT WASHER 6MM
83	P1022083	HANDLE
85	P1022085	KNOB
87	P1022087	HANDWHEEL
88-1	P1022088-1	POINTER ASSEMBLY
89	PSS03M	SETSCREW M6-1.0 x 8
90	P1022090	FRONT BRACKET
91	PW01M	FLAT WASHER 8MM
92	PSB13M	CAP SCR M8-1.25 x 30
93	P1022093	ANGLE WORM SHAFT
95	P1022095	COLLAR
96	PSS02M	SETSCREW M6-1.0 x 6
97	PRP02M	ROLL PIN 3 x 16
98	PN05M	HEX NUT M16-1.5
99	P1022099	FRONT TRUNNION
100	PRP06M	ROLL PIN 5 X 24
101	PSS04M	SET SCR M6 - 1.0 x 12
102	P1022102	WAVY WASHER
103	PW03M	FLAT WASHER 6MM
104	PB08M	HEX BOLT M6-1.0 x 20
105	PB10M	HEX BOLT M6-1.0 x 25
106	PN01M	HEX NUT M6-1.0
107	P1022107	SET PLATE
108	P1022108	LINKING BAR
109	P1022109	SPACER
110	P1022110	ECCENTRIC SLEEVE
111	P1022111	WORM SHAFT
112	P1022112	SPACER
113	P1022113	ARBOR BRACKET
114	P1022114	ARBOR BRACKET PIN
115	P1022115	ARBOR NUT
116	P1022116	FLANGE
118	P1022118	BLADE ARBOR
120	P6203	BEARING 6203-2RS
122	PK01M	KEY 5 x 5 x 22M
123	P1022123	WORM
124	P1022124	HEX NUT M17
125	P1022125	SPINDLE PULLEY
125-1	P1022125-1	MOTOR PULLEY
126	PSS03M	SETSCREW M6-1.0 x 12
127	P1022127	REAR TRUNNION
128	P1022128	REAR BRACKET
129	P1022129	MOTOR BRACKET
130	PSS04M	SETSCREW M6-1.0 x 12
131	P1022131	MOTOR PLATE ROD
132	P1022132	MOTOR PLATE

G1022ZF, ZFX, PROZ, & PROZX PARTS LIST

REF	PART #	DESCRIPTION
133	PB07M	HEX BOLT M8-1.25 x 25
134	PW01M	FLAT WASHER 8MM
135	PLW06	LOCK WASHER ⅝"
136	PN03M	HEX NUT M8-1.25
137	PN05M	HEX NUT M16-1.5
138	P1022138	SHAFT
139	P1022139	BRACKET
140	PB26M	HEX BOLT M8-1.25 x 30
141	PB03M	HEX BOLT M8-1.25 x 16
142	P1022142	CONNECTING PLATE
143	PN03M	HEX NUT M8-1.25
144	PW01M	FLAT WASHER 8MM
145	P1022ZF145	SWITCH L-BRACKET
146	P1022ZF146	SWITCH
147	PWRCRD110S	POWER CORD
147-1	PWRCRD110L	MOTOR CORD
148	P1022148	SPANNER WRENCH
149	P1022149	PULLEY GUARD BRACKET
150	PB10	HEX BOLT ¼"-20 x 2"
152	P1022152	SLEEVE
153	P1022153	PULLEY COVER
154	PWN02	WING NUT ¼"-20
155	P1022Z155	UPPER BRACKET - LONG
155-1	P1022Z155-1	UPPER BRACKET - SHORT
155-2	P1022Z155-2	LOWER BRACKET - SHORT
155-3	P1022Z155-3	LOWER BRACKET - LONG
156	P1022156	WIRE CLAMP
157	PS08M	PHLP HD SCR M5-0.8 x 12
158	PN06M	HEX NUT M5-0.8
159	P1022ZF159	POWER TWIST BELT
160A	G5009	1.5 HP USA MOTOR
160B	G4192	2.0 HP USA MOTOR
161	P1022161	STRAIN RELIEF (Not Shown)
162	P1022Z162	SUPPORTING ARM
163	P1022Z163	RETAINER
164	P1022069	PRAWL
166	P1022Z166	PIN
167	P1022164	SPACER
171	PB47M	HEX BOLT M6-1.0 x 40
173	P1022Z173	PIVOT PIN
174	P1022Z174	GUARD
175	P1022Z175	RETAINER
176	P1022068	SPRING
179	PLN03M	LOCK NUT M6-1.0
180	PN02M	HEX NUT M10-1.5
182	PS02M	PHLP HD SCR M4-0.7 X 12
183	PB39M	HEX BOLT M6-1.0 x 50
189	P1022ZF189	DUST PORT ADAPTER
190	P1022ZF190	DUST PORT

REF	PART #	DESCRIPTION
250	P1022Z250	CLAMP
251	PS05M	PHLP HD SCR M5-0.8 X 8
252	P1022Z252	SPRING
325	P1022SM325	WARNING LABEL
326	P1022SM326	ELECTRICITY LABEL
327	P1022SM327	SAFETY GLASSES LABEL
328*	P1022ZF328	MACHINE ID LABEL (*G1022ZF)
328*	P1022ZFX328	MACHINE ID LABEL (*G1022ZFX)
328*	P1022PROZ328	MACHINE ID LABEL (*G1022PROZ)
328*	P1022PROZX328	MACHINE ID LABEL (*G1022PROZX)
329	P1022SM329	BLADE GUARD LABEL

TROUBLESHOOTING GUIDE

SYMPTOM	POSSIBLE CAUSE	CORRECTIVE ACTION
Motor will not start.	1. Low voltage. 2. Open circuit in motor or loose connections.	1. Check power line for proper voltage. 2. Inspect all lead connections on motor for loose or open connections.
Motor will not start; fuses or circuit breakers blow.	1. Short circuit in line cord or plug. 2. Short circuit in motor or loose connections. 3. Incorrect fuses or circuit breakers in power line.	1. Inspect cord or plug for damaged insulation and shorted wires. 2. Inspect all connections on motor for loose or shorted terminals or worn insulation. 3. Install correct fuses or circuit breakers.
Motor overheats.	1. Motor overloaded. 2. Air circulation through the motor restricted.	1. Reduce load on motor. 2. Clean out motor to provide normal air circulation.
Motor stalls (resulting in blown fuses or tripped circuit).	1. Short circuit in motor or loose connections. 2. Low voltage. 3. Incorrect fuses or circuit breakers in power line. 4. Motor overloaded.	1. Inspect connections on motor for loose or shorted terminals or worn insulation. 2 Correct the low voltage conditions. 3. Install correct fuses or circuit breakers. 4. Reduce load on motor.
Machine slows when operating.	Applying too much pressure to workpiece.	Feed workpiece slower.
Loud, repetitious noise coming from machine.	1. Pulley setscrews or keys are missing or loose. 2. Motor fan is hitting the cover. 3. V-belts are defective	1. Inspect keys and setscrews. Replace or tighten if necessary. 2. Tighten fan or shim cover. 3. Replace V-belts. See **Maintenance.**
Blade is not square w/miter slot or fence is not square to blade.	1. Blade is warped. 2. Table top is not parallel to blade. 3. Fence is not parallel to blade.	1. Replace blade. 2. Make table parallel to blade. See **Adjustments.** 3. Make fence parallel to blade. See **Adjustments.**
Fence hits table top when sliding on to the table.	1. Front rail is bolted too low on the table. 2. Rear rail is bolted too low on the table.	1. Raise front rail. 2. Raise rear rail.
Blade does not reach 90°.	1. 90° stop bolt is out of adjustment. 2. Pointer bracket is hitting before the blade reaches 90°.	1. Adjust 90° stop bolt. See **Adjustments.** 2. File down the right side of the pointer bracket until the blade can reach 90°.
Blade hits insert at 45°.	1. Hole in insert is inadequate. 2. Table out of alignment. 3. Blade position is incorrect.	1. File or mill the hole in the insert. 2. Align table. See **Adjustments.** 3. Adjust blade position. See **Adjustments.**
Blade won't go beneath table surface.	Table top too low.	Raise table top w/washers.
Hand wheels won't turn.	1. Hand wheel key is inserted too far. 2. Bullets are wedged. 3. Roll pin or setscrew in worm gear is contacting geared trunnion.	1. Remove hand wheel and adjust key. 2. Remove hand wheel and adjust bullets. 3. Inspect roll pins and setscrews in the worm gear. Tighten if necessary.

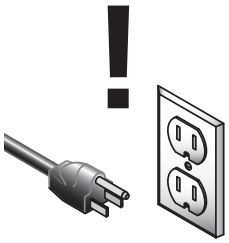

⚠WARNING

Disconnect the machine power cord during adjustments. Failure to follow this warning could result in serious personal injury or death.

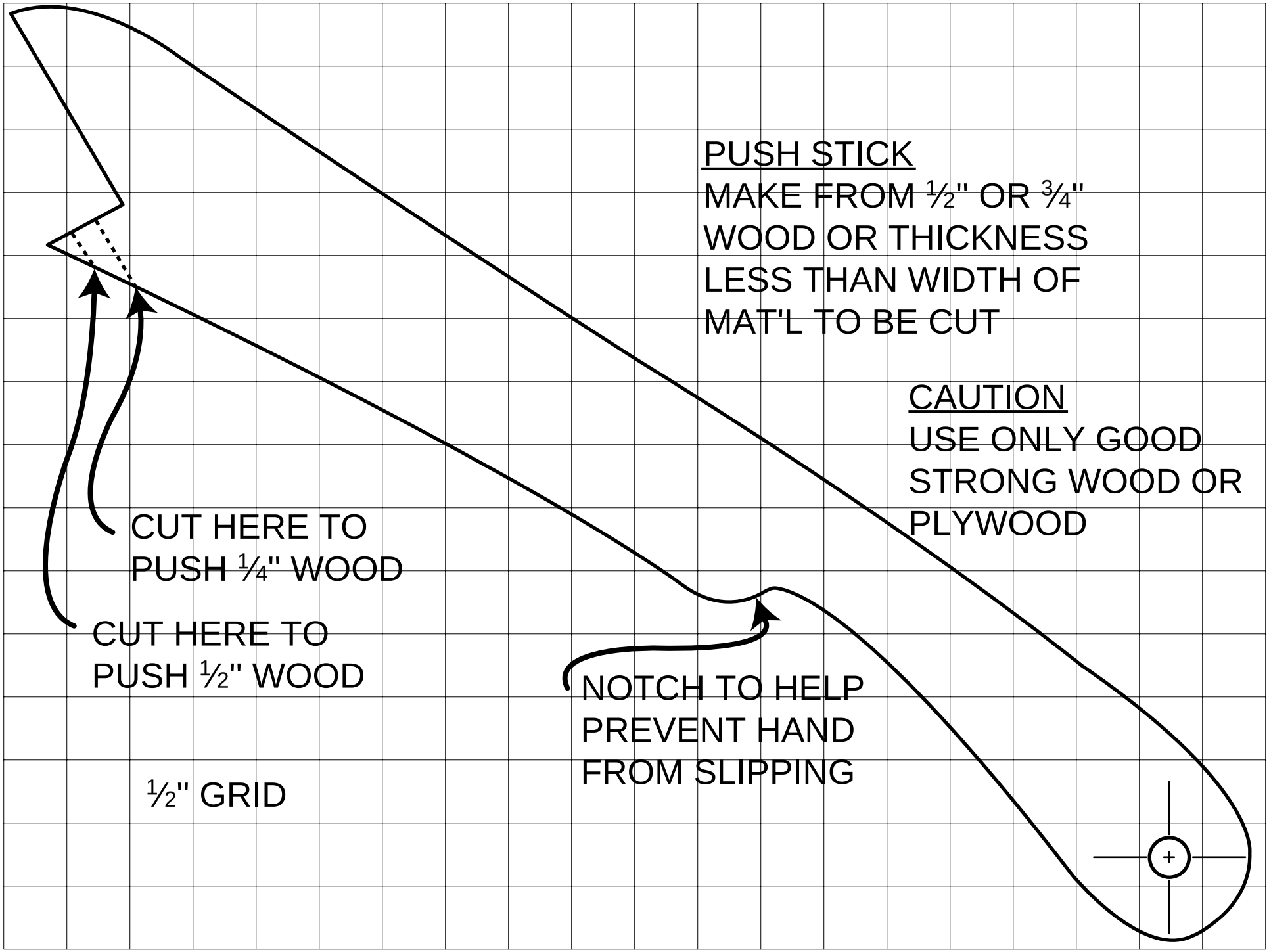
PUSH STICK
MAKE FROM ½" OR ¾"
WOOD OR THICKNESS
LESS THAN WIDTH OF
MAT'L TO BE CUT
CAUTION
USE ONLY GOOD
STRONG WOOD OR
PLYWOOD
CUT HERE TO
PUSH ¼" WOOD
CUT HERE TO
PUSH ½" WOOD
NOTCH TO HELP
PREVENT HAND
FROM SLIPPING
½" GRID

Notes

Notes

WARRANTY AND RETURNS

Grizzly Industrial, Inc. warrants every product it sells for a period of **1 year** to the original purchaser from the date of purchase. This warranty does not apply to defects due directly or indirectly to misuse, abuse, negligence, accidents, repairs or alterations or lack of maintenance. This is Grizzly's sole written warranty and any and all warranties that may be implied by law, including any merchantability or fitness, for any particular purpose, are hereby limited to the duration of this written warranty. We do not warrant or represent that the merchandise complies with the provisions of any law or acts unless the manufacturer so warrants. In no event shall Grizzly's liability under this warranty exceed the purchase price paid for the product and any legal actions brought against Grizzly shall be tried in the State of Washington, County of Whatcom.

We shall in no event be liable for death, injuries to persons or property or for incidental, contingent, special, or consequential damages arising from the use of our products.

To take advantage of this warranty, contact us by mail or phone and give us all the details. We will then issue you a "Return Number," which must be clearly posted on the outside as well as the inside of the carton. We will not accept any item back without this number. Proof of purchase must accompany the merchandise.

The manufacturers reserve the right to change specifications at any time because they constantly strive to achieve better quality equipment. We make every effort to ensure that our products meet high quality and durability standards and we hope you never need to use this warranty.

Please feel free to write or call us if you have any questions about the machine or the manual.

Thank you again for your business and continued support. We hope to serve you again soon.

WARRANTY CARD

Name _____

Street _____

City _____State_____Zip_____

Phone Number_____E-Mail_____FAX_____

MODEL # _____Order #_____

The following information is given on a voluntary basis. It will be used for marketing purposes to help us develop better products and services. Of course, all information is strictly confidential.

1. How did you learn about us?

___Advertisement
___Catalog
___World Wide Web
___Friend
___Card Deck

___Other_____

2. Which of the following magazines do you subscribe to.

___American Woodworker
___Cabinetmaker
___Family Handyman
___Fine Homebuilding
___Fine Woodworking
___Home Handyman
___Journal of Light Construction
___Old House Journal
___Popular Mechanics
___Popular Science
___Popular Woodworking
___Practical Homeowner
___Shop Notes
___Today's Homeowner
___WOOD
___Wooden Boat
___Woodshop News
___Woodsmith
___Woodwork
___Woodworker
___Woodworker's Journal
___Workbench

___Other_____

3. Which of the following woodworking/remodeling shows do you watch?

___Backyard America
___Home Time
___The American Woodworker
___The New Yankee Workshop
___This Old House
___Woodwright's Shop

___Other_____

4. What is your annual household income?

___$20,000-$29,999
___$30,000-$39,999
___$40,000-$49,999
___$50,000-$59,999
___$60,000-$69,999
___$70,000-$79,999
___$80,000-$89,999
___$90,000 +

5. What is your age group?

___20-29
___30-39
___40-49
___50-59
___60-69
___70 +

6. How long have you been a woodworker?

___0 - 2 Years
___2 - 8 Years
___8 - 20 Years
___20+ Years

7. How would you rank your woodworking skills?

___Simple
___Intermediate
___Advanced
___Master Craftsman

8. What stationary woodworking tools do you own? Check all that apply.

___Air Compressor
___Band Saw
___Drill Press
___Drum Sander
___Dust Collector
___Horizontal Boring Machine
___Jointer
___Lathe
___Mortiser
___Panel Saw
___Planer
___Power Feeder
___Radial Arm Saw
___Shaper
___Spindle Sander
___Table Saw
___Vacuum Veneer Press
___Wide Belt Sander

___Other_____

9. How many of your woodworking machines are Grizzly? _____

10. Which benchtop tools do you own? Check all that apply.

___1" x 42" Belt Sander
___5" - 8" Drill Press
___8" Table Saw
___8" - 10" Bandsaw
___Disc/Belt Sander
___Mini Jointer
___6" - 8" Grinder
___Mini Lathe
___10" - 12" Thickness Planer
___Scroll Saw
___Spindle/Belt Sander

___Other_____

11. How many of the machines checked above are Grizzly? _____

12. Which portable/hand held power tools do you own? Check all that apply.

___Belt Sander
___Biscuit Joiner
___Circular Saw
___Detail Sander
___Drill/Driver
___Miter Saw
___Orbital Sander
___Palm Sander
___Portable Planer
___Saber Saw
___Reciprocating Saw
___Router

___Other_____

13. What machines/supplies would you like Grizzly Industrial to carry?

_____

_____

14. What new accessories would you like Grizzly Industrial to carry?

_____

_____

15. What other companies do you purchase your tools and supplies from?

_____

_____

16. Do you think your purchase represents good value?

___Yes ___No

17. Would you recommend Grizzly Industrial to a friend?

___Yes ___No

18. Would you allow us to use your name as a reference for Grizzly customers in your area? **Note: We never use names more than three times.**

___Yes ___No

19. Comments:_____

_____

_____

_____

_____

FOLD ALONG DOTTED LINE

_____

_____

_____

GRIZZLY INDUSTRIAL, INC.
P.O. BOX 2069
BELLINGHAM, WA 98227-2069

FOLD ALONG DOTTED LINE

Send a Grizzly Catalog to a friend:

Name_____

Street_____

City_____State_____Zip_____

TAPE ALONG EDGES--PLEASE DO NOT STAPLE

grizzly.com
TOOL WEBSITE

Buy Direct and Save with Grizzly® – Trusted, Proven and a Great Value!

Visit Our Website Today And Discover Why Grizzly® Is The Industry Leader!

- SECURE ORDERING
- ORDERS SHIPPED WITHIN 24 HOURS
- E-MAIL RESPONSE WITHIN ONE HOUR

Plus Receive a

FREE GIFT

with each online order
for Limited Time Only

-OR-

Call Today For A **FREE**
Full Color Catalog

1-800-523-4777